Assembly, installation and maintenance manual

Montage-, Aufbau- und Wartungsanleitung ● Assemblage, manuel de montage et d'entretien ● Montaje, instalación y mantenimiento ● Manuale di montaggio, installazione e manutenzione ● Monterings- og vedlikeholdsmanual ● Monterings-, installations- och underhållsmanual ● Kokoamis-, asennus- ja huolto-ohje ● Vejledning for montering og vedligehold ● Handleiding voor montage, installatie en onderhoud ● Manual de montagem, instalação e manutenção ● Návod k montáži, instalaci a údržbě ● Instrukcja montażu, instalacji i konserwacji ● Surinkimo, montavimo ir priežiūros vadovas ● Montāžas, uzstādīšanas un apkopes rokasgrāmata ● Руководство по сборке и обслуживанию ● Montaaži-, paigaldus- ja säilitamise juhend

Log cabin **FR28-3630-1**

Treatment options, Item code

●Behandlungsoptionen, Artikel-Code ● Traitement options, code de l'article ● Opciones de tratamiento, código del artículo ● Opzioni di trattamento, codice articolo ● Behandlingsalternativer, artikkelnummer ● Behandlingsalternativ, varukod ● Käsittelyvaihtoehdot, yksikön koodi ● Behandlingsmuligheder, artikel nummer ● Behandelingsopties, artikelnummer ● Opções de tratamento, código do artigo ● Povrchové úpravy, kód položky ● Możliwości leczenia, kod produktu ● Apdorojimo variantai, prekės kodas ● Apstrādes iespējas, artikula kods ● Варианты обработки, код изделия ● Töötlusvõimalused, tootekood

BNDIP 109458

Factory inspection by ● Werkskontrolle durch ● Contrôle à partir de l'usine par ● Inspector de fábrica ● Collaudato da ● Fabrikkkontroll utført av ● Fabriksbesiktigat av ● Tehtaan tarkastaja ● Fabriks Kontrol udført af ● Fabriekscontrole door ● Inspeção de fábrica, por: ● Zkontrolováno ve výrobním závodě ● Kontrola fabryczna do ● Apžiūrą gamykloje atliko ● Rūpnīcas pārbaudi veicis ● Заводской контроль ● Tehase kontroll teostatud:	**Date** ● Datum ● Date ● Fecha ● Data ● Dato ● Datum ● Päiväys ● Dato ● Datum ● Data ● Datum ● Data ● Datums ● Data ● Дата ● Kuupäev: **Pack number** ● Pack Nr. ● Packet n° ● Bulto Nº ● Pacco N. ● Serienr ● Produktionsnummer ● Pakettinro ● Pakke nr. ● Pak nr. ● Número de embalagem ● Číslo balení ● Numer opakowania ● Pakuotės numeris ● Iepakojuma numurs ● Упаковочный номер ● Pakinumber:

Palmako AS | Näituse 25 | 50409 Tartu | Estonia | Ph: +372 7 355 530 | Fax: +372 7 355 544 | contact@palmako.ee | www.palmako.ee

Pos	SPECIFICATION-STÜCKLISTE-NOMENCLATURE-ELEMENTI-ESPECIFICATIÓN FR28-3630-1	Pcs	Profile (mm)	Length (mm)
001	100 3324 100	1	28x57	3580
002	100 3324 100	16	28x114	3580
007	910 100	2	28x57	1038
008	910 100	32	28x114	1038
009	100 2704 100	32	28x114	2960
010	300 2704 200	1	28x114	3260
011	300 2704 200	1	28x114	3260
W1-1	13° 006 006 13° 005 004 003 451 3580	1		
W2-1	13° 006 006 13° 005 004 003 451 3580	1		
PR1	Purlin- Dachpfette- Arbalétrier- Arcareccio- Correa 300 2704 200	4	44x120	3260
PR2	Purlin- Dachpfette- Arbalétrier- Arcareccio- Correa 300 2704 200	1	44x120	3260
RB1-1	Roof board- Dachbrett- Madrier du toit- Tavola tetto- Tabla de tejado	74	89x16	2020
Dia-1	Diamond- Deckbrett- Madrier- Tavola di copertura- Rombo	2	19x140	300
FaB3-1	Facia board- Giebelblende- Écran frontal- Schermo frontone- Tabla de facia	4	16x120	2040
RE1-1	Roof edge reinforcement- Dachrandleiste- Baguette en bordure du toit- Rinforzo bordo tetto- Refuerzo borde tejado 16x45	2	16x45	3260
StB1-1	Storm brace- Sturmleiste- Protection contre le vent- Antivento- Protector contra tormentas	4	25x45	1860
WB1-1	Wind brace- Windbrett- Madrier contre le vent- Tavola vento- Tabla contra el viento	4	16x45	2040
Fim	--Fixing kit- Befestigungsset- Moyens de fixation- Materiale di fissaggio- Kit de fijación	1	USE	
QPOYP 8x60Zn	Bolt -Schloss-schraube -Boulon- Bullone- Perno- M8x60mm PUPO	8	StB1-1	
QNA2 2x50Zn	Nail- Nagel- Clou- Chiodo- Clavo- 2.5x50mm	320	RB1-1	
QNP25 x60Zn	Nailing plate- Nagelplatte- Connecteur métallique- Piastra connettore- Placa del clavo 57x25x2	7	001+002; 007+008	
QMUK K8Zn	Nut- Schraubenmutter- Écrou- Dado- Tuerca- M8mm	8		
QKRYP 3x16Zn	Screw- Schraube- Vis- Vite- Tornillo- 3x16mm ZnY	28		

Object name FR28-3630-1

Pos	SPECIFICATION-STÜCKLISTE-NOMENCLATURE-ELEMENTI-ESPECIFICATIÓN FR28-3630-1	Pcs	Profile (mm)	Length (mm)
QKRPP 3x30Zn	Screw- Schraube- Vis- Vite- Tornillo- 3x30mm	14	RE1-1	
QKRPP4 _5x50Zn	Screw- Schraube- Vis- Vite- Tornillo- 4.5x50mm	25	Dia; WB	
QKRPP4 _5x70Zn	Screw- Schraube- Vis- Vite- Tornillo- 4.5x70mm	60	010; 011; PRx; FaB	
QSE8 x20Zn	Washer- Dichtscheibe- Joint- Rondella- Arandela- 8x20mm	8		

Pos	SPECIFICATION-STÜCKLISTE-NOMENCLATURE-ELEMENTI-ESPECIFICATIÓN FR28-3630-1	Pcs	Profile (mm)	Length (mm)
TU28 -49PT	Door - Tür - Porte - Porta-Puerta 1494x1822 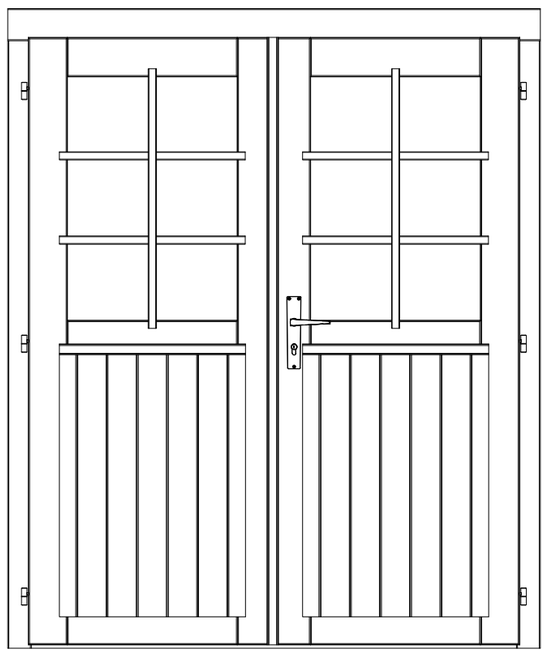 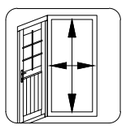 1394x1753mm	1		
SiS5-1	Side slat - Randleiste - Baguette en bordure - Listello bordo 5 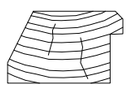	2	28x45	1570
QULSI 30x35	Cylinder- Zylinderschloss- Serrure a mortaiser- Serratura a cilindro- Bombin- 30.35 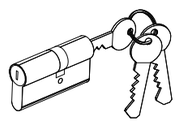	1		
QP20x68 x1430RV	Detail- Detail- Detail- Dettaglio- Detalle- Läveplekk 20x68x1430 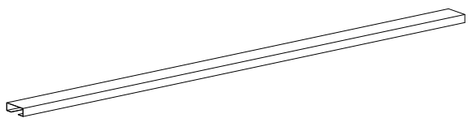	1		
QR120Zn	Door fittings- Türbeschlag- Ferrure- Ferramenta porta- Manilla (puerta)- QR120Zn 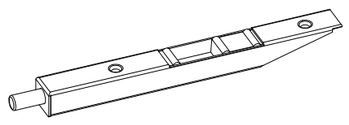	2		
QULRA 2018Zn	Door fittings- Türbeschlag- Ferrure- Ferramenta porta- Manilla (puerta)- QULRA2018Zn 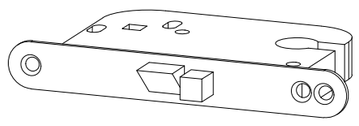	1		
QLIU KAPal	Door fittings- Türbeschlag- Ferrure- Ferramenta porta- Manilla puerta- QLIUKAPal	1		
QLVU-6	Door fittings- Türbeschlag- Ferrure- Ferramenta porta- Manilla puerta- Vasturaud 0068 Zn mantel 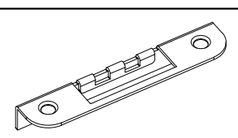	1		
QHP16-E	Door hinge- Türbänder- Charniere de porte- Cerniere porta- Bisagra de puerta- QHP16-E 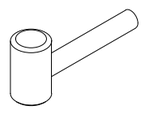	6		
QHP16-I	Door hinge- Türbänder- Charniere de porte- Cerniere porta- Bisagra de puerta- QHP16-I 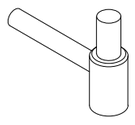	6		
QRV1 20Zn	Keeper- Schliessblech- Tole- Lamiera- Aldaba de candado- 120Zn	1		
QKRPP2 _5x16Zn	Screw- Schraube- Vis- Vite- Tornillo- 2.5x16mm Zn	2		
QKRPP3 _5x25Zn	Screw- Schraube- Vis- Vite- Tornillo- 3.5x25mm Zn	5		
QKRPP 3x20Zn	Screw- Schraube- Vis- Vite- Tornillo- 3x20mm	12		
QKRPP 3x30Zn	Screw- Schraube- Vis- Vite- Tornillo- 3x30mm	4		
QKRPP4 _5x70Zn	Screw- Schraube- Vis- Vite- Tornillo- 4.5x70mm 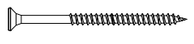	10		
QKRPP 5x90Zn	Screw- Schraube- Vis- Vite- Tornillo- 5x90mm 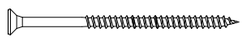	4		

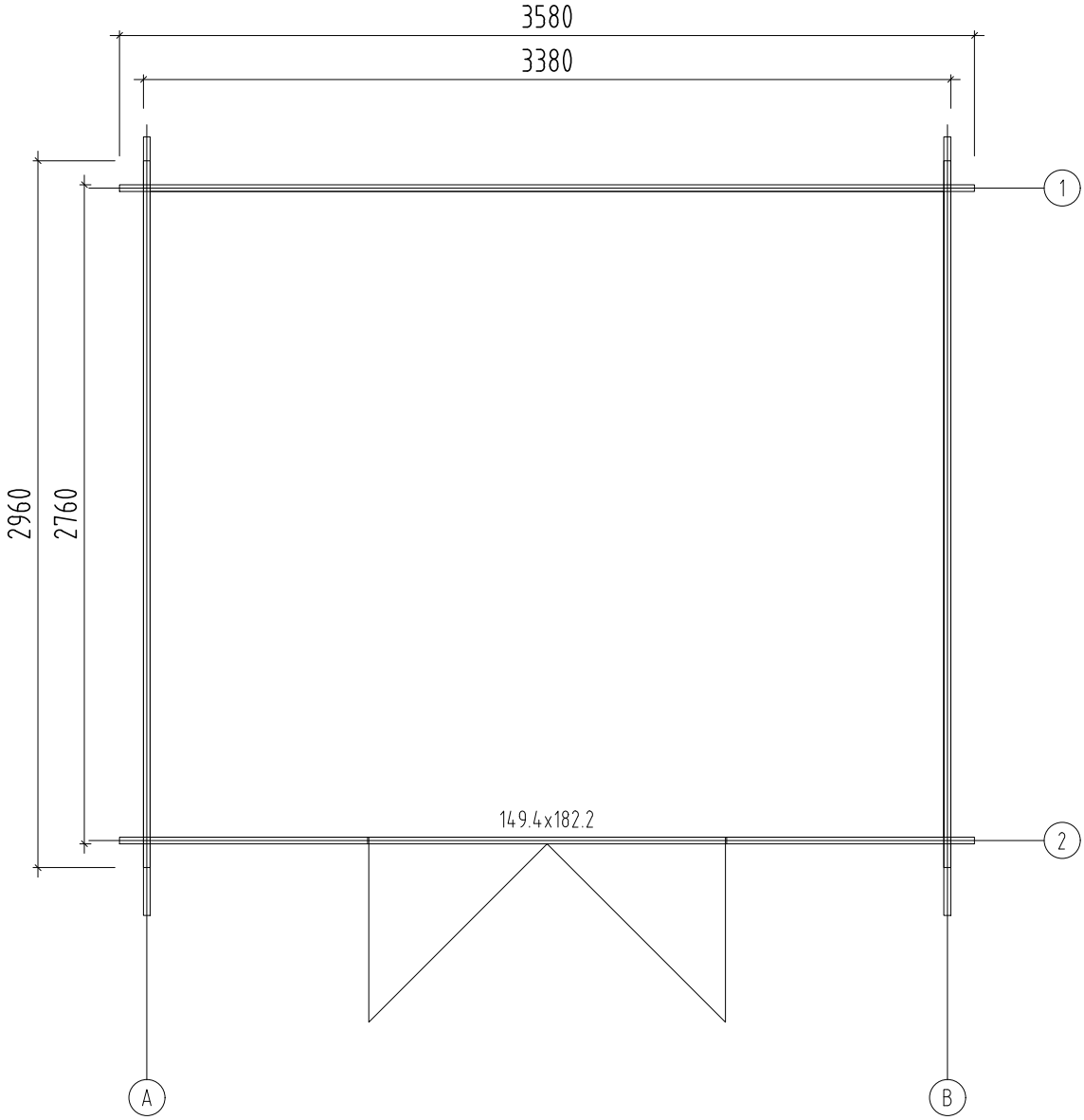

Object name FR28-3630-1	Drawing Plan		Scale 1:30 Paper A4
Palmako LEMEKS GROUP AS Palmako Näituse 25, Tartu 50409, Estonia tel. +372 73 55 530 fax. +372 73 55 544 www.palmako.com	Customer	Log 28x114	
	Drawn by 945		
	Date 27.08.2021	File T05536.dwg	Page 1

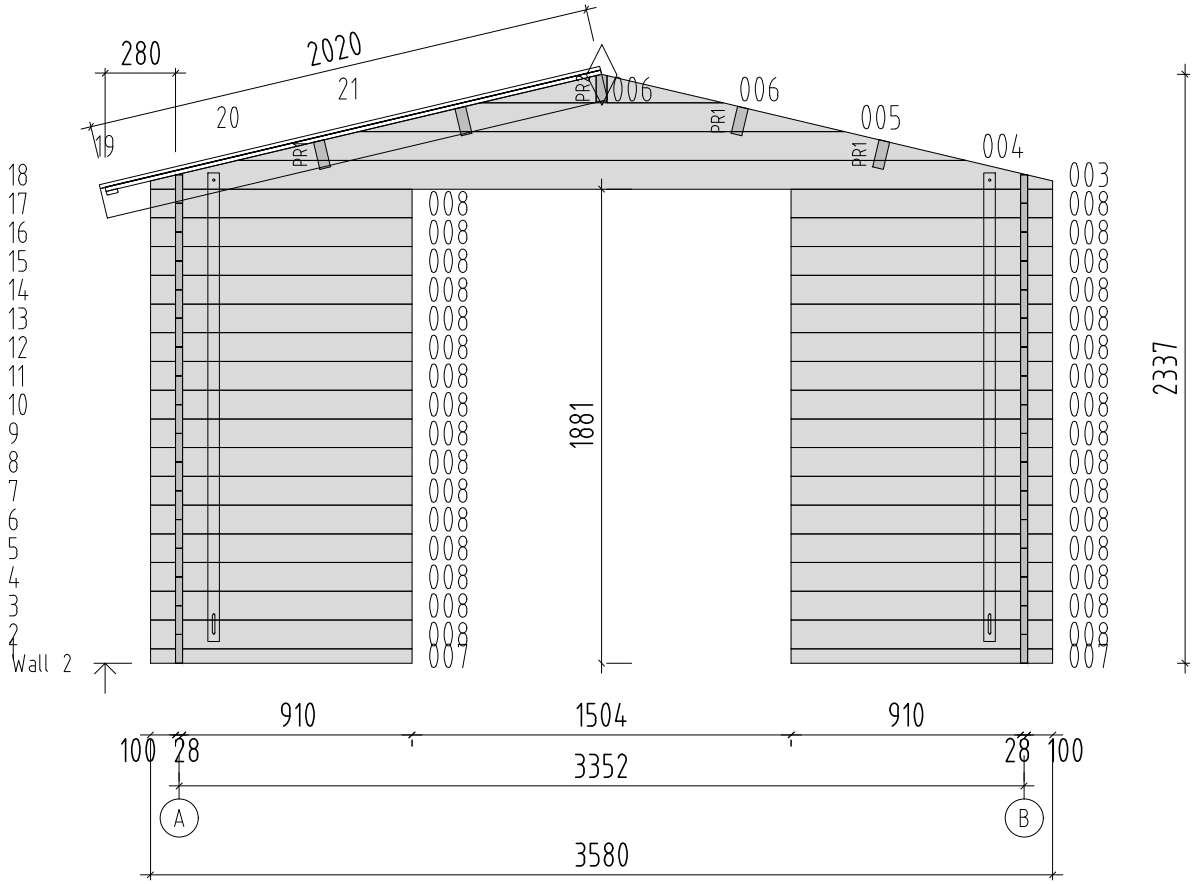

Object name T05536	Drawing WALL 2		Scale 1:30 Paper A4
Palmako LEMEKS GROUP AS Palmako Näituse 25, Tartu 50409, Estonia tel. +372 73 55 530 fax. +372 73 55 544 www.palmako.com	Customer	Log 28x114	
	Drawn by 945		
	Date 15.07.2021	File T05536.dwg	Page 5

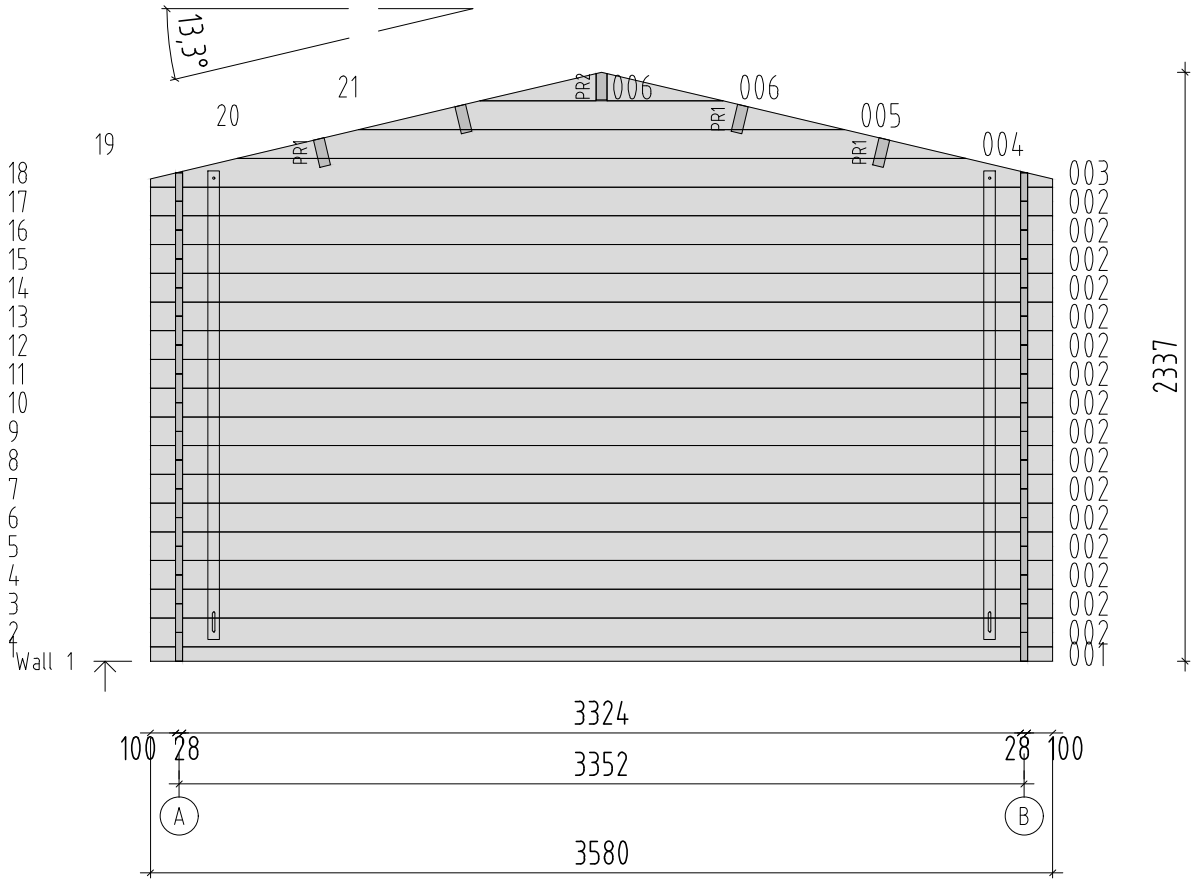

Object name T05536	Drawing WALL 1		Scale 1:30 Paper A4
Palmako LEMEKS GROUP AS Palmako Näituse 25, Tartu 50409, Estonia tel. +372 73 55 530 fax. +372 73 55 544 www.palmako.com	Customer	Log 28x114	
	Drawn by 945		
	Date 15.07.2021	File T05536.dwg	Page 4

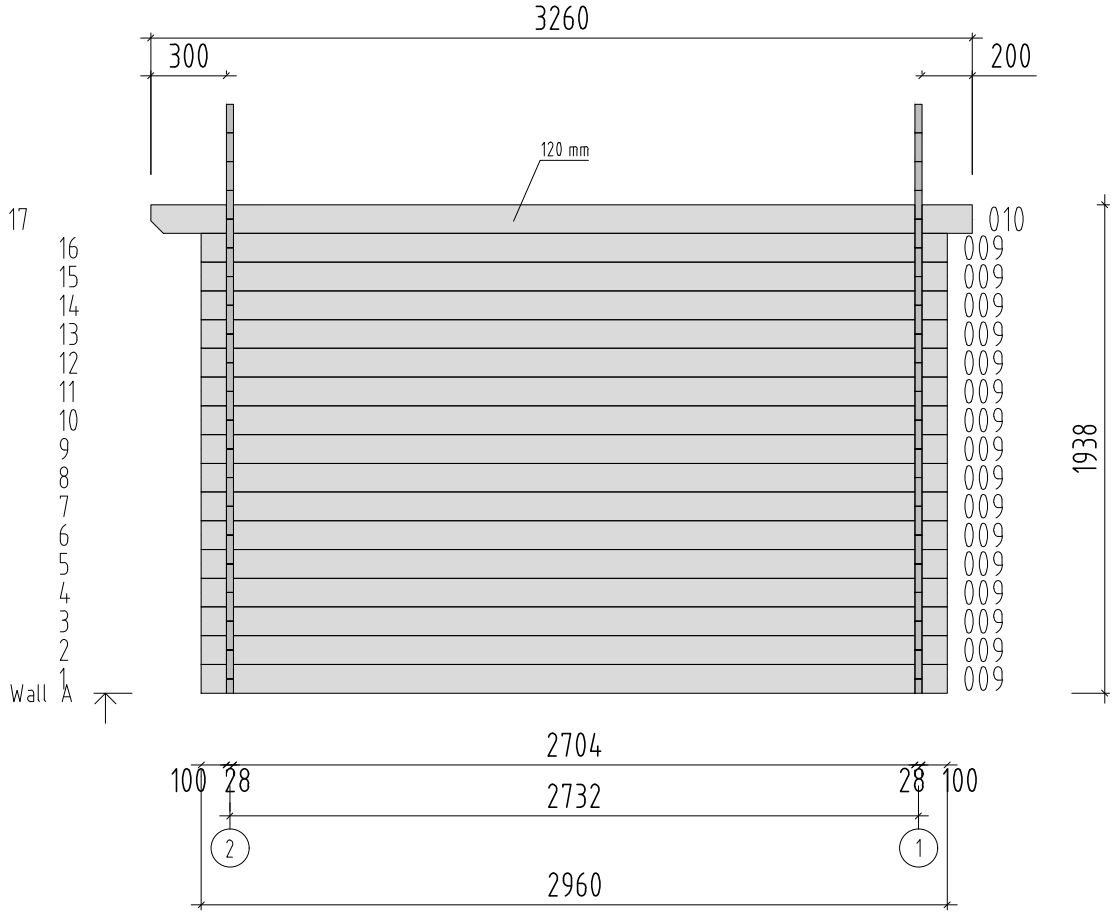

Object name T05536	Drawing WALL A		Scale 1:30 Paper A4
Palmako LEMEKS GROUP AS Palmako Näituse 25, Tartu 50409, Estonia tel. +372 73 55 530 fax. +372 73 55 544 www.palmako.com	Customer	Log 28x114	
	Drawn by 945		
	Date 15.07.2021	File T05536.dwg	Page 2

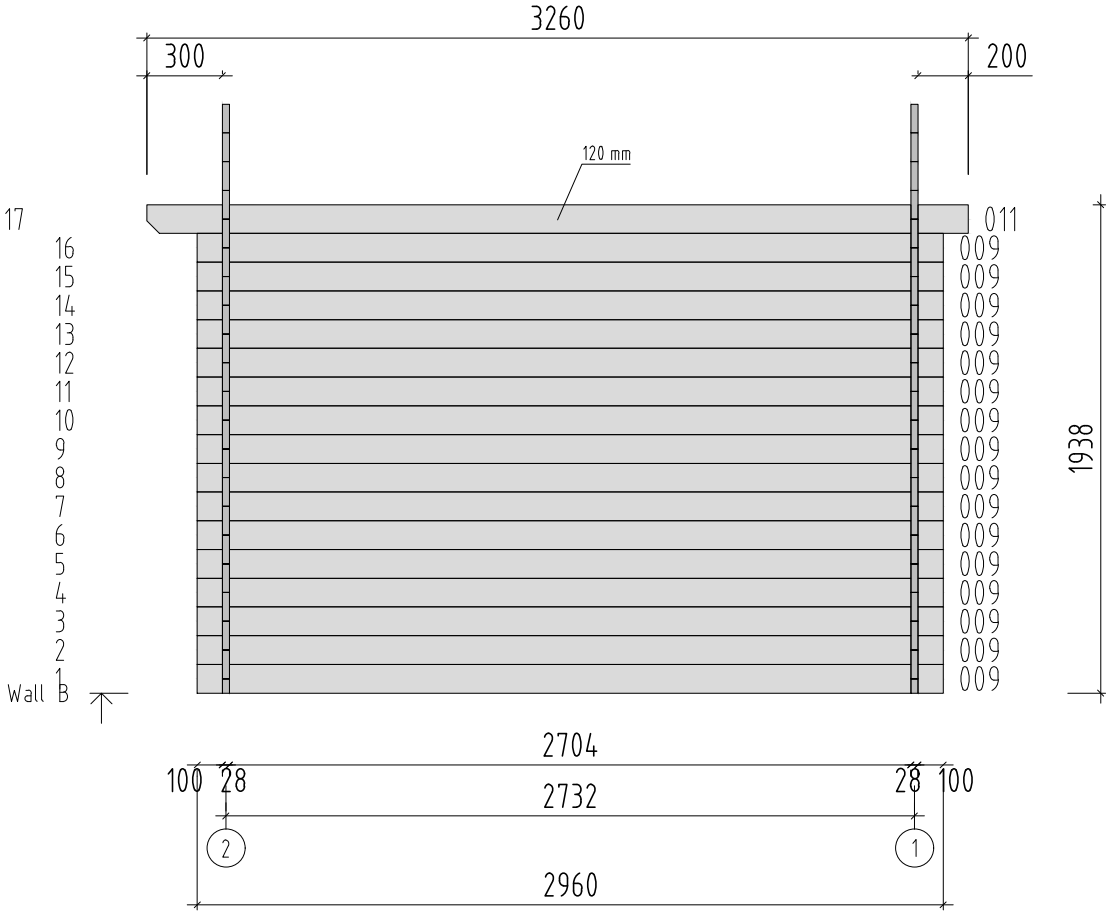

Object name T05536	Drawing WALL B		Scale 1:30 Paper A4
Palmako LEMEKS GROUP AS Palmako Näituse 25, Tartu 50409, Estonia tel. +372 73 55 530 fax. +372 73 55 544 www.palmako.com	Customer	Log 28x114	
	Drawn by 945		
	Date 15.07.2021	File T05536.dwg	Page 3

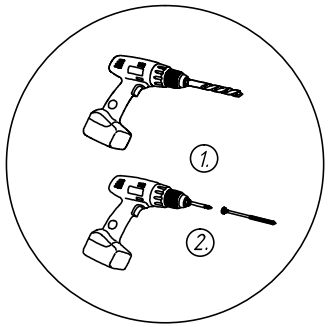

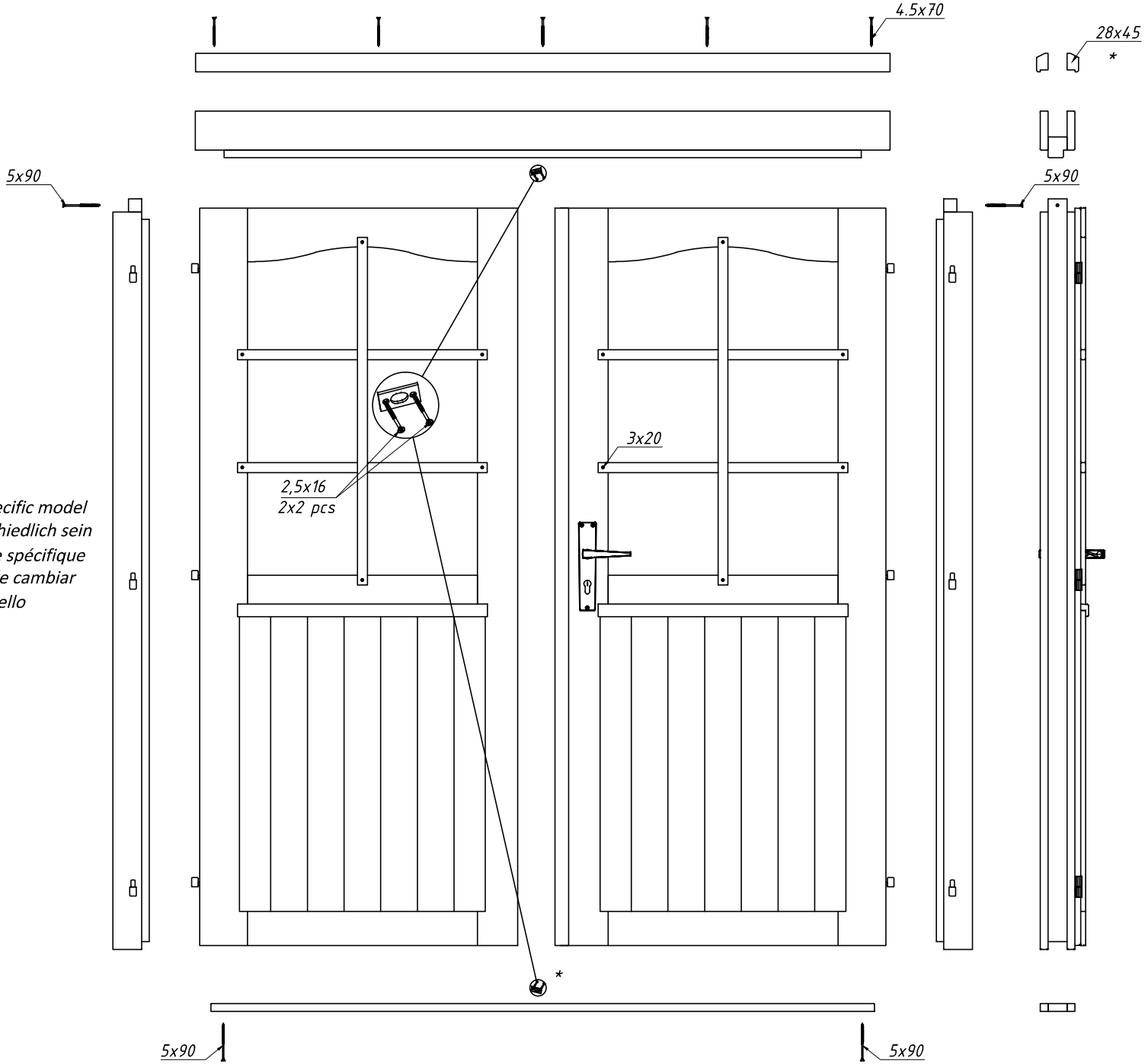

** The specification may vary depending on the specific model*
** Die Spezifikation können je nach Modell unterschiedlich sein*
** Les spécifications peuvent varier selon le modèle spécifique*
** Dependiendo del modelo, la especificación puede cambiar*
** Le specifiche possono variare a seconda del modello*

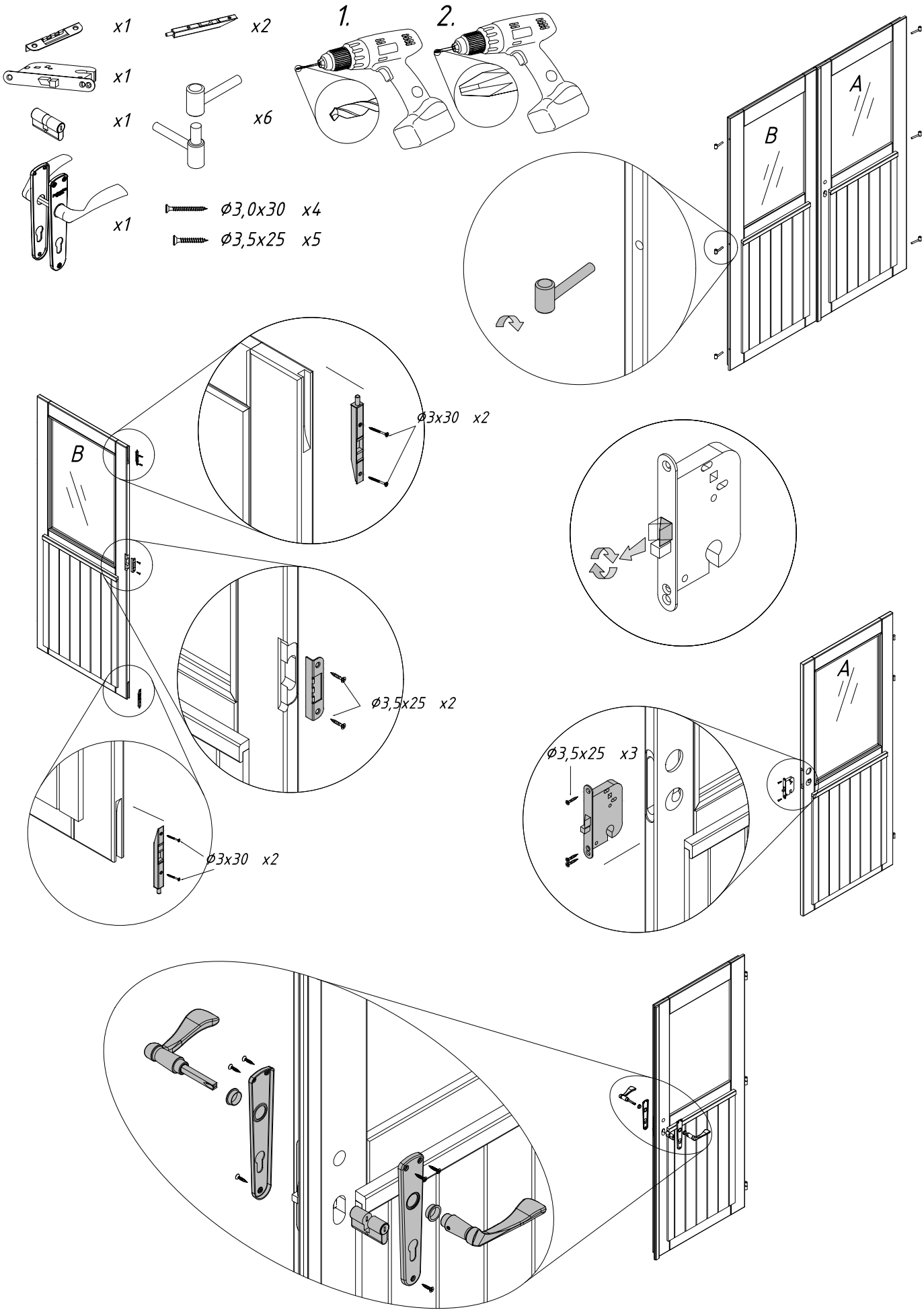
x1
x2
x1
x1
x6
x1
Ø3,0x30 x4
Ø3,5x25 x5
1.
2.
A
B
Ø3x30 x2
B
Ø3,5x25 x2
Ø3x30 x2
A
Ø3,5x25 x3