Assembly, installation and maintenance manual

Playhouse EL16-2316

Width 233 x Depth 157 cm
Wall thickness 16 mm

WARNINGS:

Not suitable for children under 3 years. Risk of crushing.
To be used under the direct supervision of an adult. Risk of falling.
Only for outdoor domestic use.
Keep away from fire.
The product is supplied disassembled. Adult assembly required.
Intended for children from 3 to 14 years (max 50 kg/user).

Produced by:
PALMAKO AS
Näituse 25, Tartu
50409 Estonia

The product complies with standard
EN 71 & Directive 2009/48/EC.

Attention!

- It is not allowed to climb on the barriers and roof of the assembled product.
- Caution. Wooden details can contain slight torn grain or sharp ends and edges.
- The supplied kit does not include any roof cover material. Before you begin using the product, you must obtain a suitable roof cover material (bitumen shingles or rolls) and install it in accordance with the manufacturer's instructions! It is not recommended to leave the product without a roof cover in the rain or it will void the warranty!
- The product is delivered unfinished.

1 Assembly manual

Dear client,

We are glad that you have decided in favour of our product!

Please read the assembly manual carefully before proceeding with the product installation! You will thus avoid problems and will not waste time.

Recommendations:

- Keep the product package until its complete assembly in a dry place, but not in direct contact with the ground, protected from weather conditions (moisture, the sun, etc.). Do not keep the product package in a heated room!
- Assemble the product on the smooth surface at least 2m from any construction or barrier such as fence, garage, house, above situated tree branches, clotheslines and electric cables.
- When selecting the product location, make sure that the product will not be subjected to extreme weather conditions (areas of strong snowfall or winds); otherwise you should attach the house (for instance, with anchors) to the subsoil.
- Since the foundation joists are in constant contact with the ground, they must be treated with a special wood preservative. Consult a specialist regarding paints suitable for unprocessed softwood and follow the paint manufacturer's instructions.

Warranty

Your product is made from high quality fir and delivered in the natural (unprocessed) form. If, despite our thorough inspection, you should have complaints, please submit the filled-out control sheet and purchase invoice to the product seller.

ATTENTION: Please be sure to keep the documentation accompanying the product package! The control sheet includes the control number of the product. We can only review complaints if you submit the control number of the product to the seller!

<u>The warranty does not cover:</u>

- Peculiarities of wood as a natural material
- Wooden details already painted (processed with a wood preservative)
- Wooden details containing whole branches that do not endanger the stability of the product
- Colour tone variations caused by wood structure differences that do not influence wood lifetime
- Wooden details containing (caused by drying) small cracks/gaps that do not pass through and do not influence the structure of the product
- Twisted wooden details if they can nevertheless be installed
- Roof and floor boards that may have on their concealed surfaces some non-planed areas, colour differences and waning
- Complaints resulting from an incompetent manner of the installation of the product or the product subsiding due to an incompetently made foundation
- Complaints caused by introducing self-initiative changes to the product, such as the deformation of wooden details and doors/windows due to an incompetent manner of wood processing; the attachment of storm braces too rigidly, doorframes being screwed onto wall logs, etc.

The complaints covered by the warranty are satisfied to the extent of replacing the deficient/faulty material. All other demands will be excluded!

Product painting and maintenance

Wood is a natural material, growing and adapting depending on weather conditions. Large and small cracks, colour tone differences and changes, as well as a changing structure of wood are not errors, but a result of wood growing and a peculiarity of wood as a natural material.

Unprocessed wood becomes greyish after having been left untouched for a while, and can be turn blue and become mouldy. To protect the wooden details of your product, you must immediately process them with a wood preservative.

Attention! **The product is supplied without elaborative workmanship. To reduce fire hazard, you should use paints or impregnation substances that prevent fire from spreading! Use water-based paints and impregnation substances and avoid solvent-based products!**

Consult a specialist regarding paints suitable for unprocessed softwood and follow the paint manufacturer's instructions.

It is not allowed to cover the product with lacquer or paint on which surface the flame spread rate is higher than 20mm/s.

When painting, use high quality tools and paints, follow the paint application manual and manufacturer's safety and usage instructions. Never paint a surface in strong sunlight or rainy weather.

After the product assembly is completed, we recommend for the conclusive finishing a weather protection paint that will protect wood from moisture and UV radiation.

- In lengthy periods of dry weather wood can shrink and the screw/bolt spots attachments can become weak. Conduct regular checks and tighten the screws/bolts as necessary (no less frequently than 6 month)! Otherwise the product may become dangerous.
- The suitability of the base material, corrosion of accessories and rotting of wooden parts should be checked once a year. Moving parts must be oiled and worn and/or defective parts should be replaced with parts provided by the manufacturer.
- Be especially attentive when checking barrier and door attachments.
- It is recommended to inspect the product thoroughly once in a year. Regular painting of the product will prolong its useful life substantially.
- You should also check the condition of the roof to discover any leaks as early as possible. Eliminate leaks as you find them to prevent rainwater from damaging the roof and other wooden parts of the product.

Attention! **For repairing the product use only identical details. The specification of the components can be found from the documentation accompanying the product package.**

We wish you total success with the product installation and much joy with this product for many years to come!

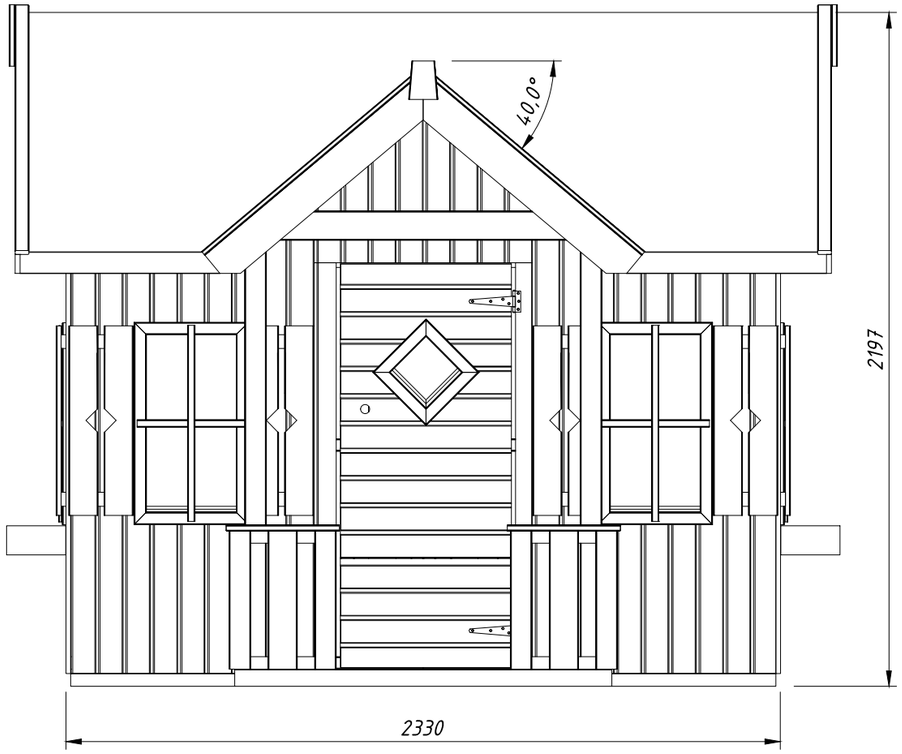

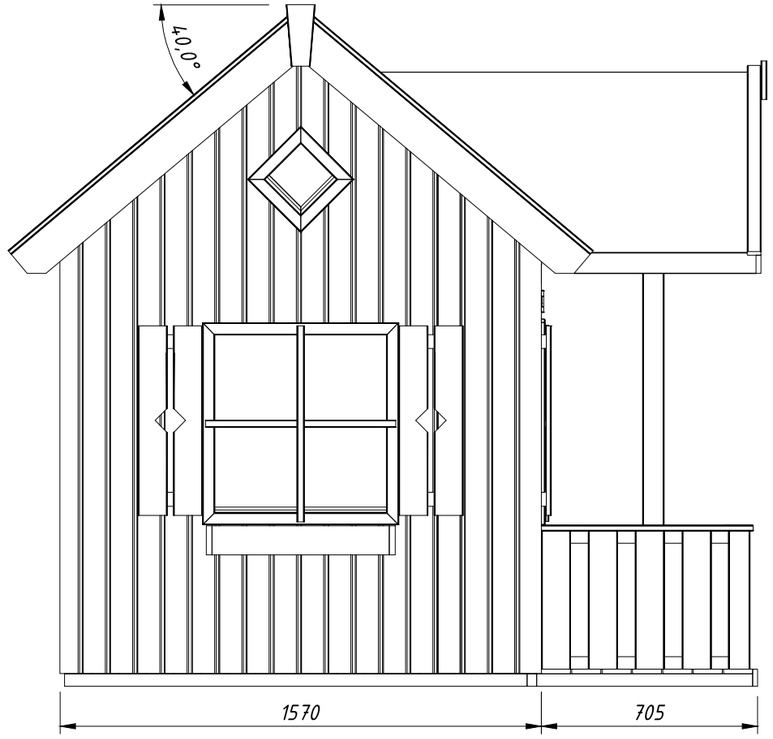

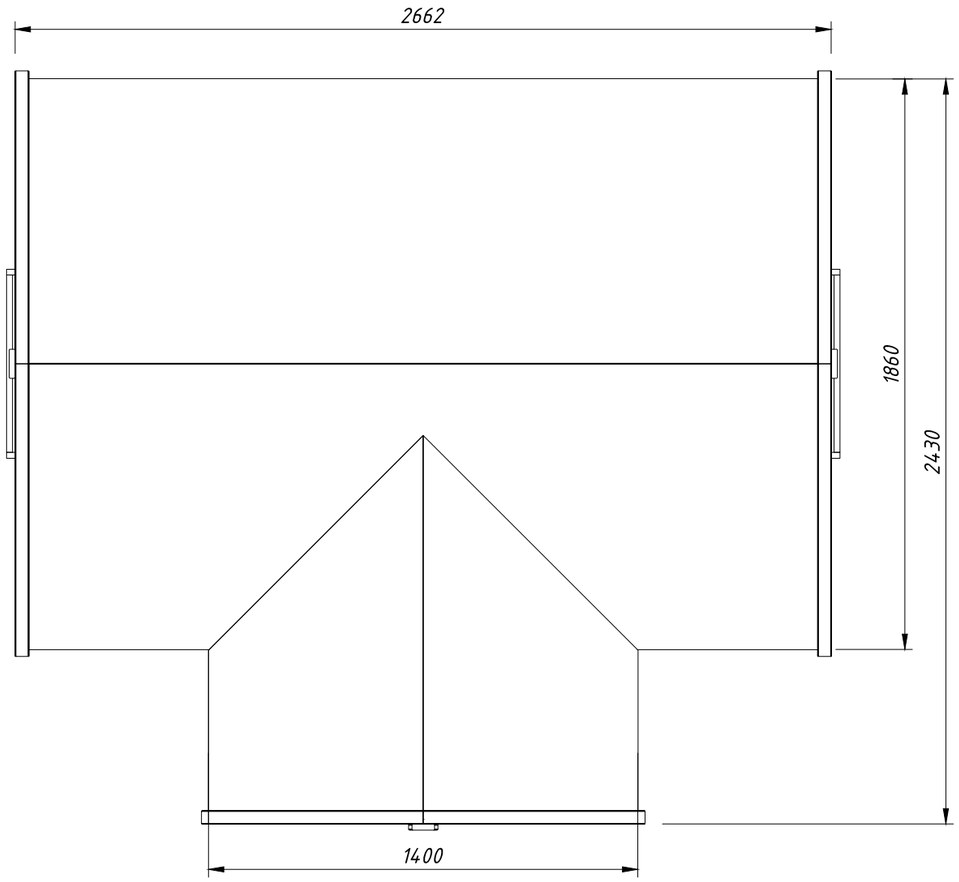

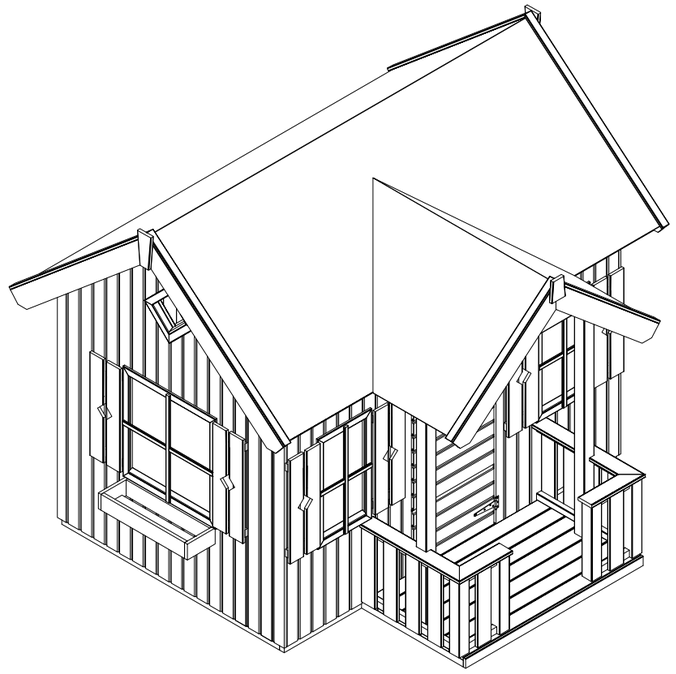

Object name: T05487	Drawing: Plan, elevations		Scale
			Paper: A4
Palmako LEMEKS GRUPP — AS Palmako, Näituse 25, Tartu 50409, tel. +372 73 55 530, fax. +372 73 55 544, www.palmako.com	Customer	Log	
	Drawn by: 007		
	Date: 20.10.2020	File	Page 1

----\\lemeks.ee\docu\10_palmako\tooted\15_prospekt\d\T05487\1_joonis_dwg

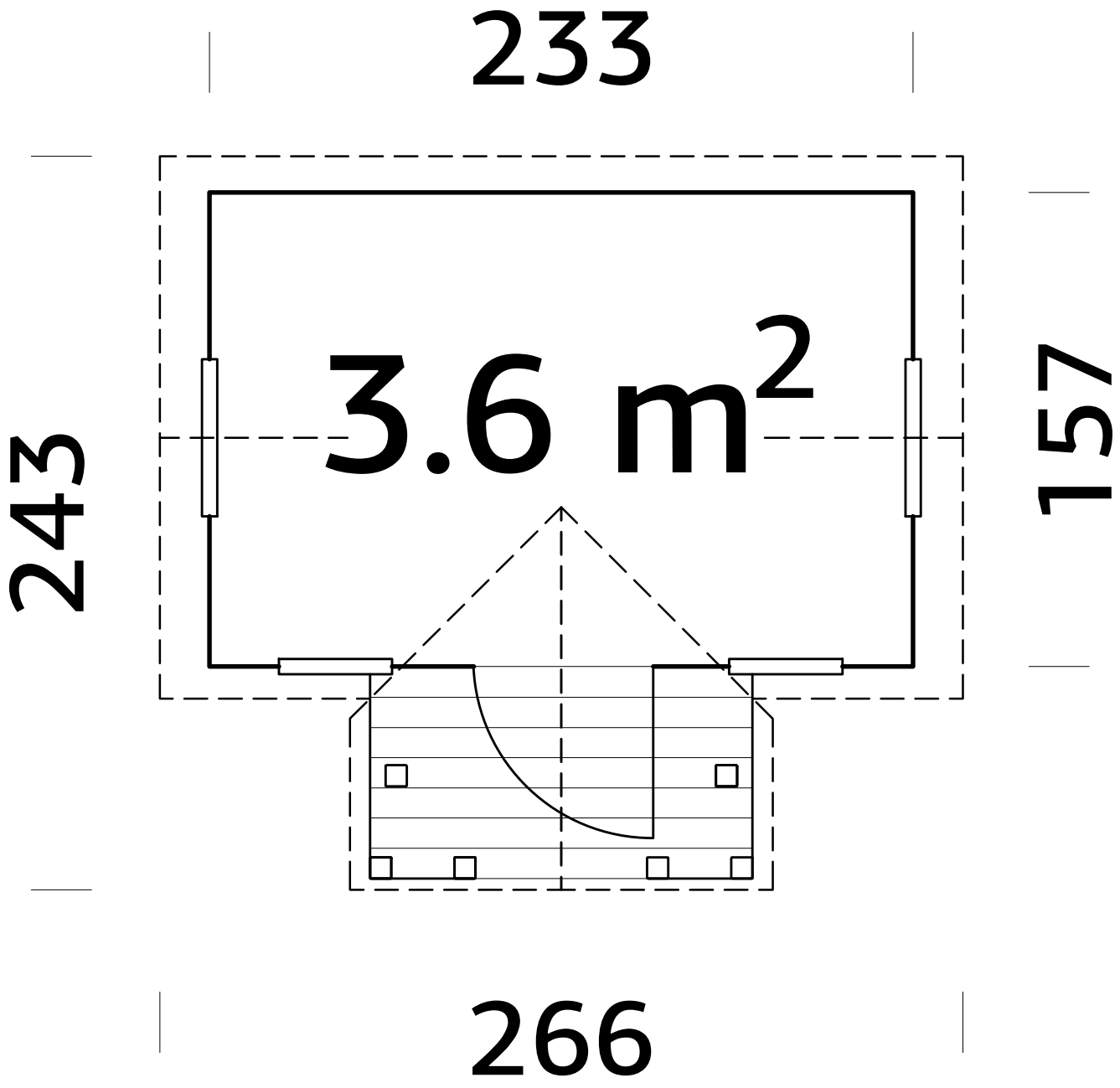
233
3.6 m2
243
157
266

Pos.	Description	Measures [mm]	Qty
EL1	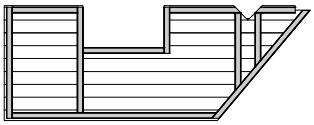	795 x 2118 x 48	2
EL2	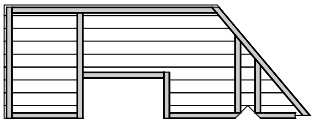	785 x 2118 x 48	2
EL3	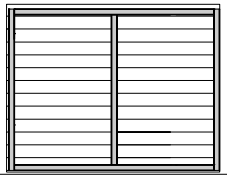	1160 x 1475 x 48	1
EL4	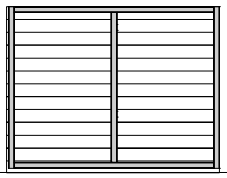	1150 x 1475 x 48	1
EL5	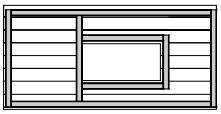	715 x 1475 x 48	1
EL6	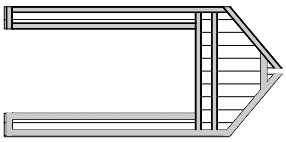	900 x 1919 x 48	1
EL7	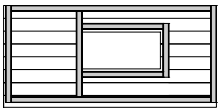	705 x 1475 x 48	1
EL8	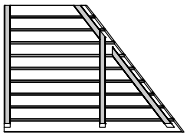	877 x 1244 x 48	1
EL9	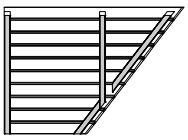	877 x 1244 x 48	1
EL10	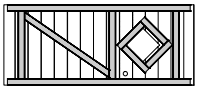	557 x 1316 x 41	1
EL11	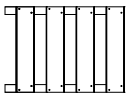	610 x 450 x 51	2
EL12	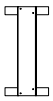	209 x 450 x 51	2
EL13	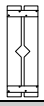	210 x 620 x 32	8

Pos.	Description	Measures [mm]	Qty
1		32 x 40 x 2300	1
2		32 x 40 x 1508	5
3		32 x 40 x 704	3
4		16 x 89 x 2300	18
5		16 x 95 x 1230	7
6		16 x 56 x 1230	1
7		19 x 120 x 2100	2
8		19 x 120 x 530	2
9		19 x 80 x 1315	2
10		16 x 89 x 880	2
11		28 x 95 x 1300	1
12		16 x 89 x 1180	60
13		16 x 45 x 729	2
14		16 x 45 x 1315	2
15		16 x 95 x 1315	2
16		16 x 95 x 703	1
17		16 x 95 x 703	1
18		16 x 120 x 1232	4
19		16 x 45 x 1245	4
20		16 x 95 x 200	2

Pos.	Description	Measures [mm]	Qty
21		16 x 95 x 619	1
22		16 x 95 x 619	1
23		16 x 120 x 930	2
24		16 x 45 x 944	2
25		19 x 95 x 125	1
26		70 x 70 x 1490	2
27		70 x 70 x 455	1
28		19 x 95 x 1164	2
29		44 x 120 x 1228	1
30		70 x 70 x 455	4
31		16 x 95 x 690	2
32		16 x 95 x 370	2
33		12 x 24 x 639	4
34		12 x 24 x 620	2
35		12 x 24 x 353	2
36		19 x 27 x 560	2
37		19 x 27 x 293	2
38		19 x 27 x 165	3
39		19 x 27 x 165	3
40		12 x 40 x 245	12

Pos.	Description	Measures [mm]	Qty
41		12 x 40 x 659	8
42		12 x 40 x 640	4
43		12 x 40 x 373	4
44		19 x 19 x 560	8
45		19 x 19 x 598	4
46		19 x 19 x 331	4
47		19 x 19 x 165	12
48		19 x 95 x 578	6
49		19 x 95 x 193	4
50		1,5 x 590 x 590	2
51		1,5 x 326 x 590	2
52		1,5 x 176 x 176	3
F1	QHT150kZN	150 mm	2
F2	QKRPP4x16Zn	ϕ 4 x 16	56
F3	QMS46x15x13	46 x 15 x 13	1
F5	QNU40x40x20Zn	40 x 40 x 20	15
F6	QKRPP4_5x70Zn	ϕ 4.5 x 70	85
F7	QKRPP4_5x50Zn	ϕ 4.5 x 50	90
F8	QKRPP3_5x40Zn	ϕ 3.5 x 40	75
F9	QKRPP3_5x30kZn	ϕ 3.5 x 30	50
F10	QKRPP3_5x35Zn	ϕ 3.5 x 35	205
F12	QNA2_2x50Zn	ϕ 2.2 x 50	240

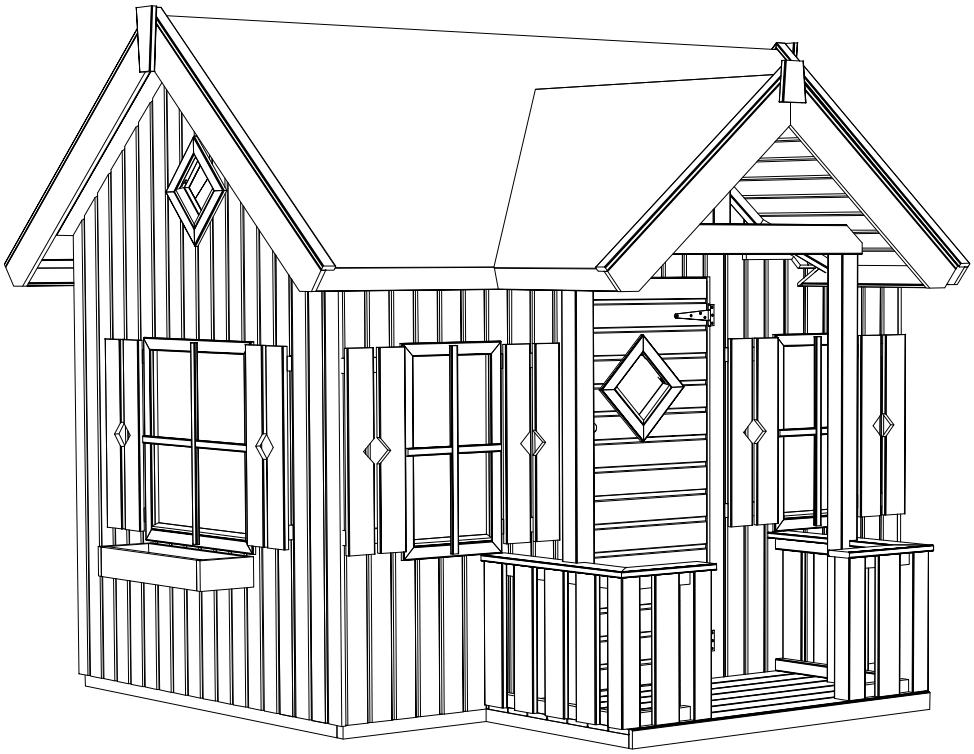

EL 16-2316

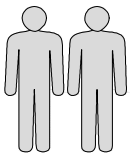

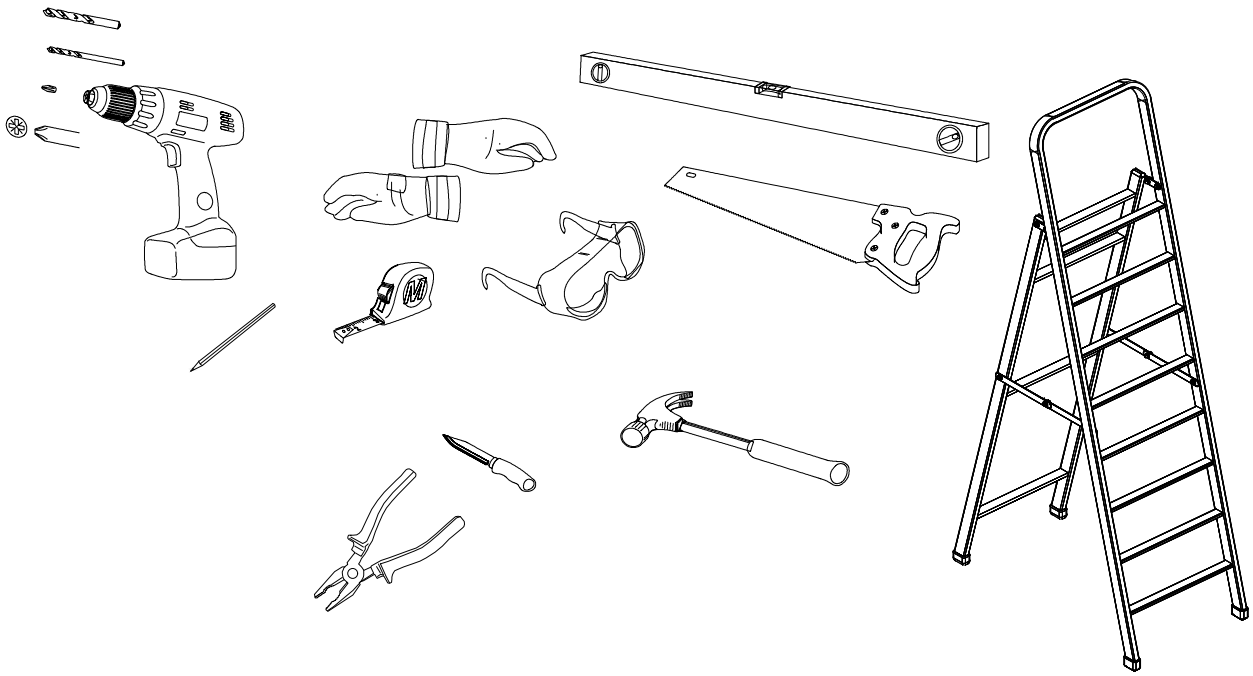

det 1 - 1 pcs
det 2 - 5 pcs
det 3 - 3 pcs
F5 - 1 pcs
F6 - 7 pcs
F9 - 4 pcs

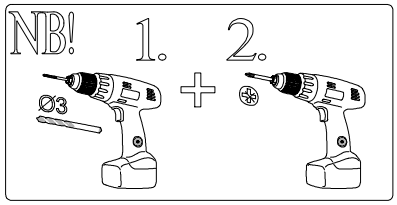

1

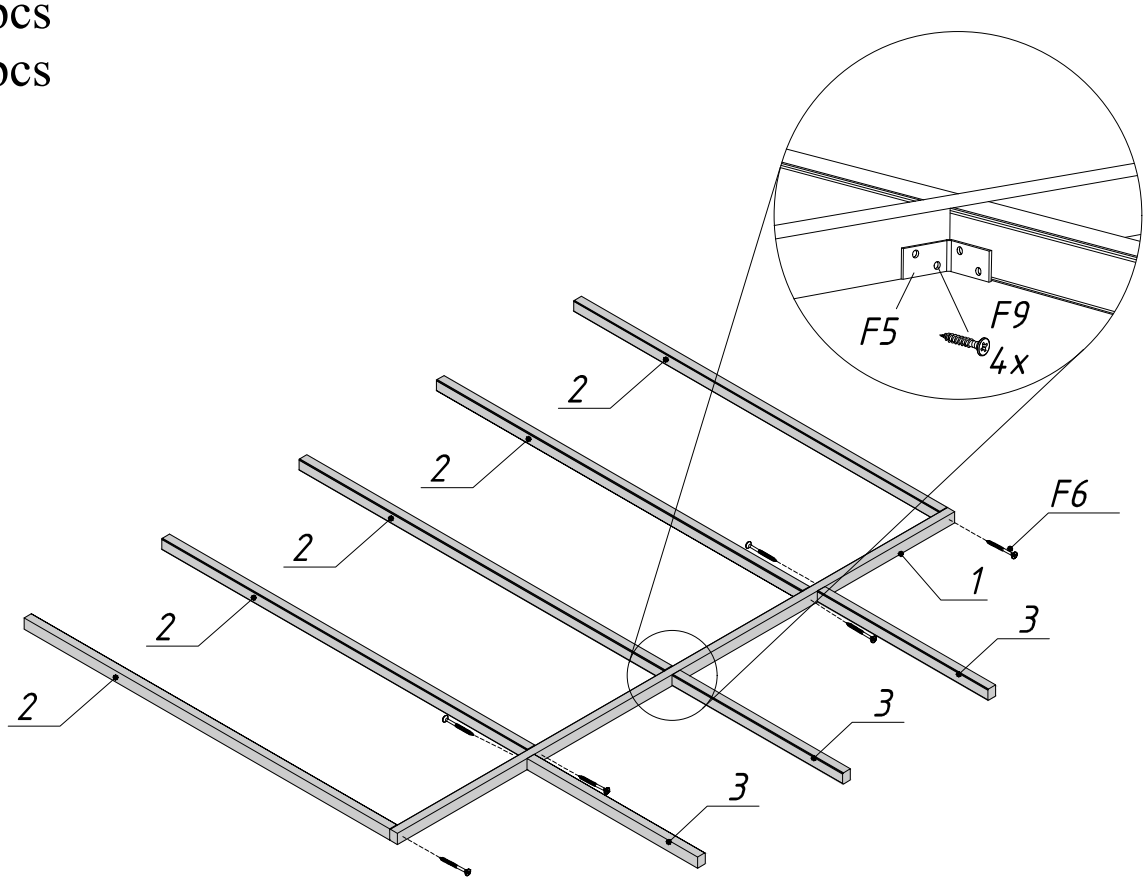

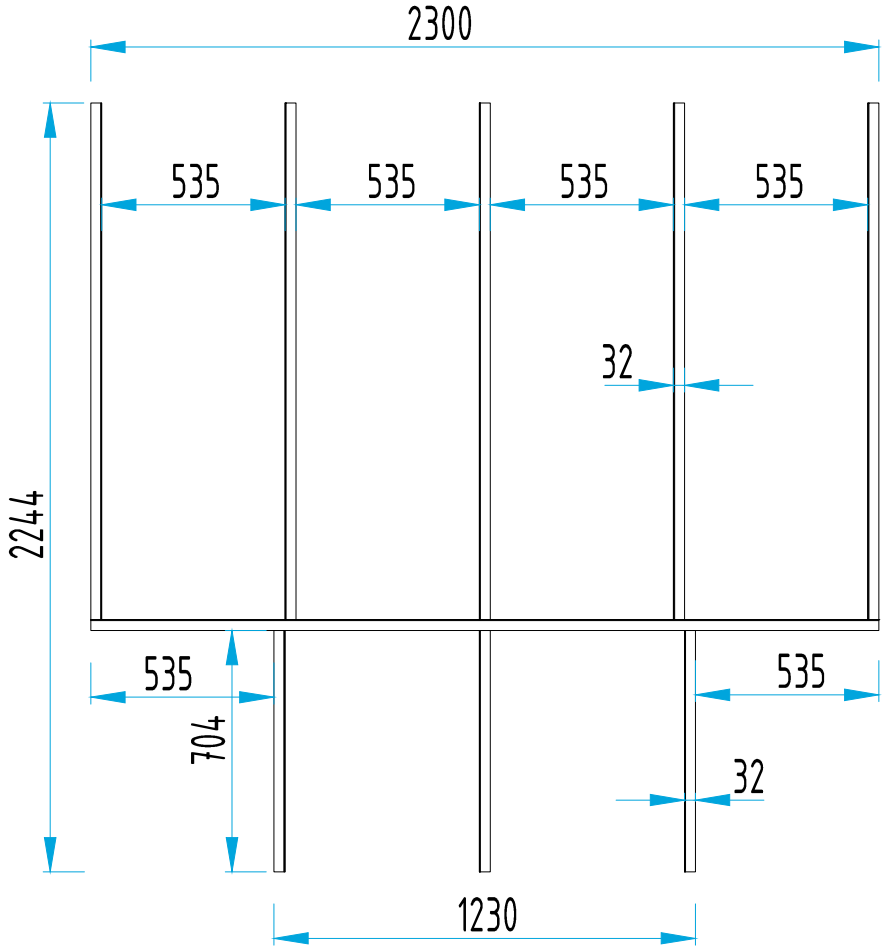

det 4 - 18 pcs
det 5 - 7 pcs
det 6 - 1pcs
F8 - 3 pcs
F12 - 111 pcs

2

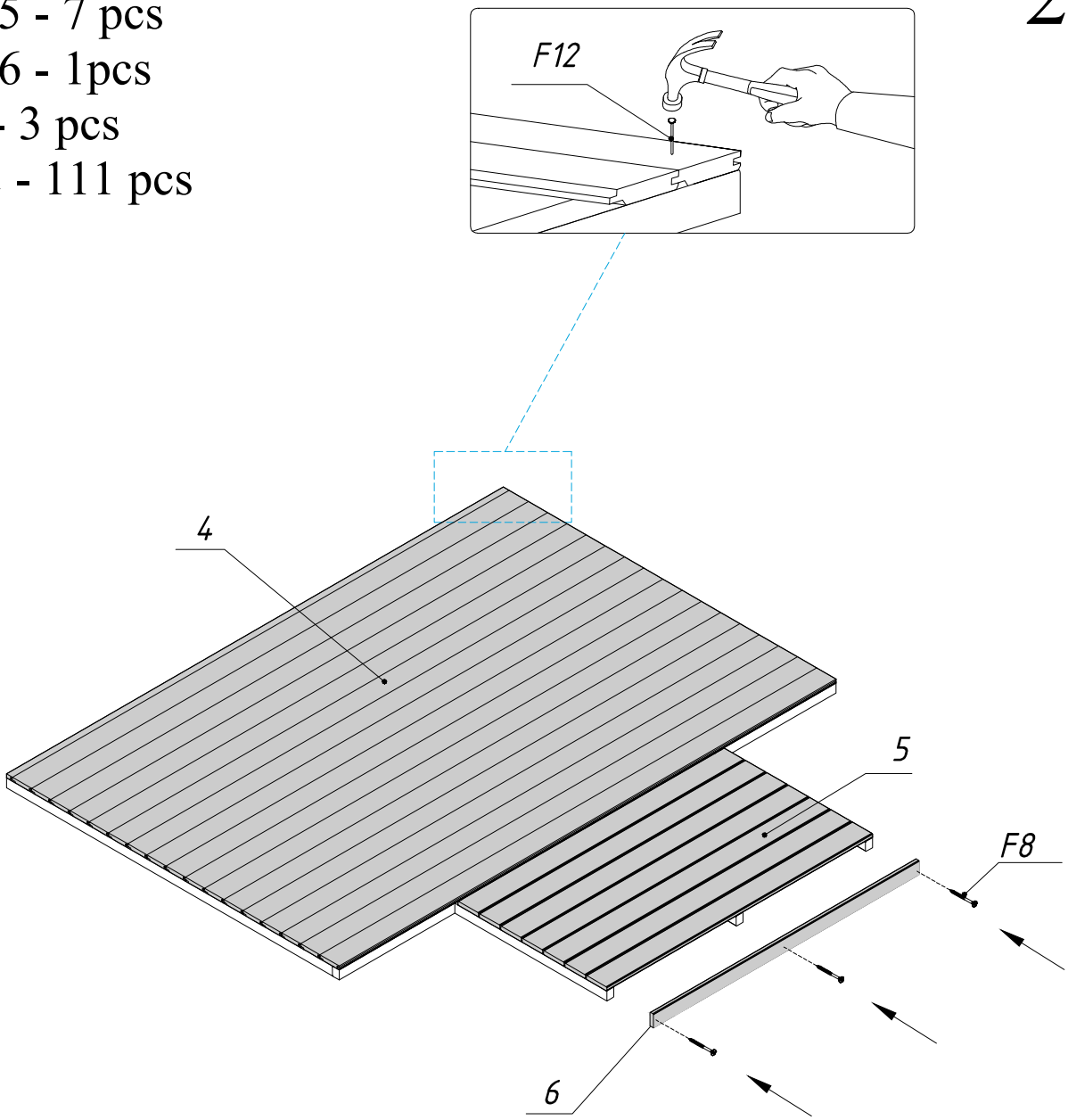

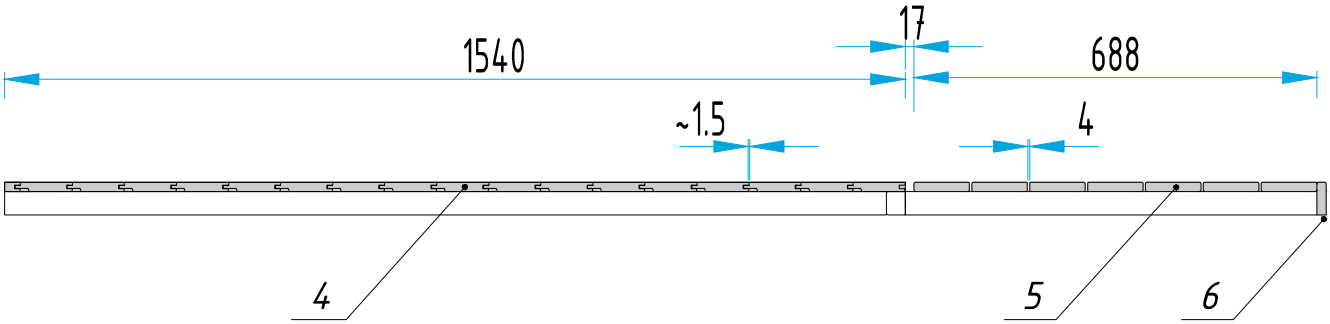

EL3 - 1 pcs
EL4 - 1 pcs
F6 - 10 pcs

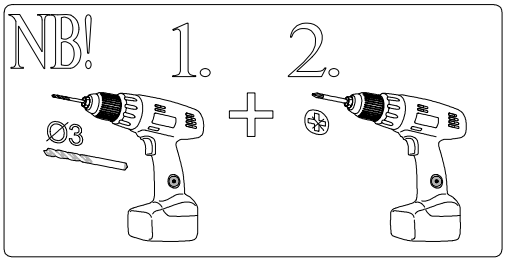

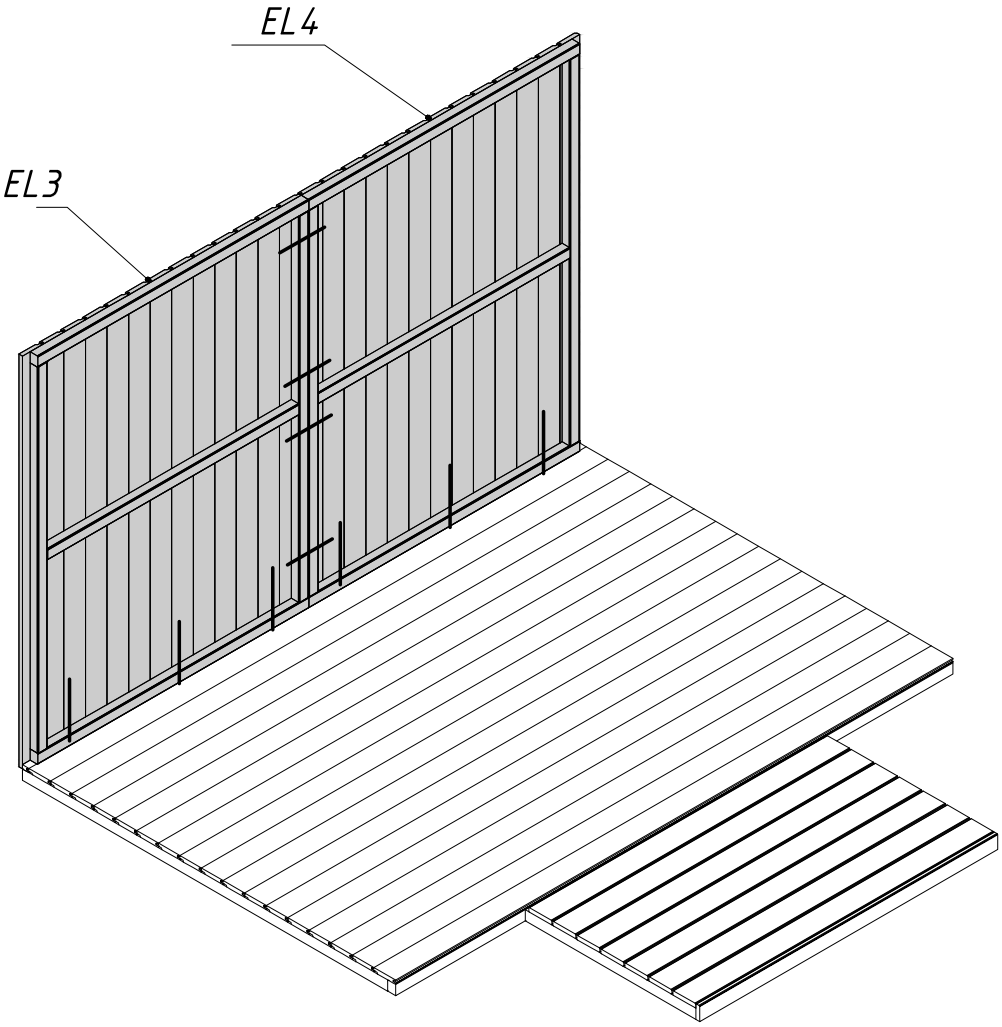

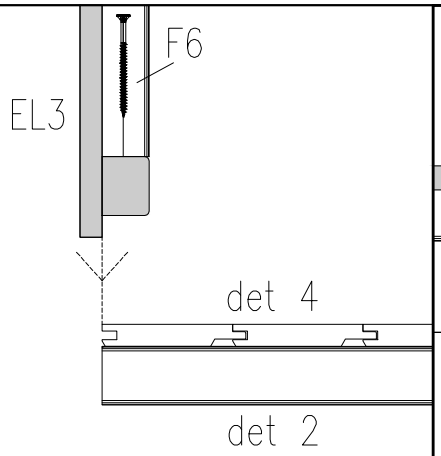

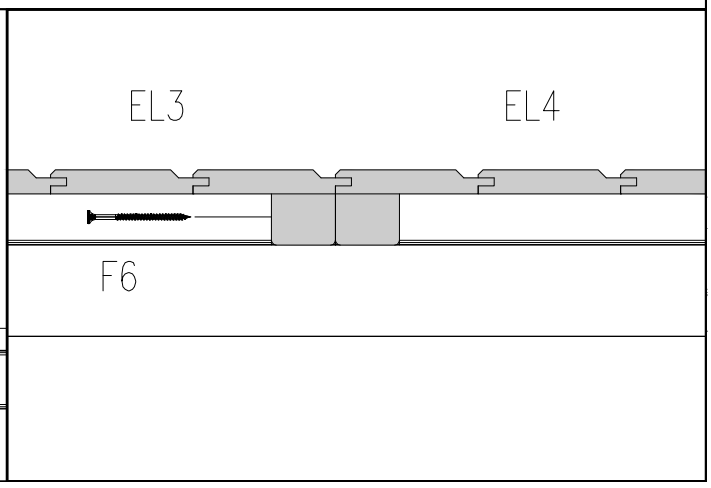

EL1 - 2 pcs
EL2 - 2 pcs
F6 - 30 pcs

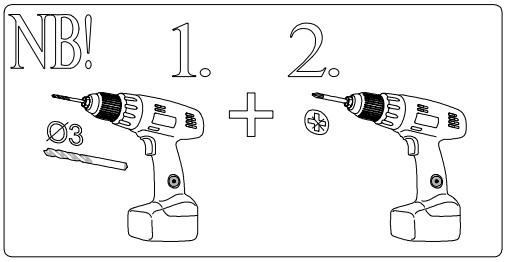

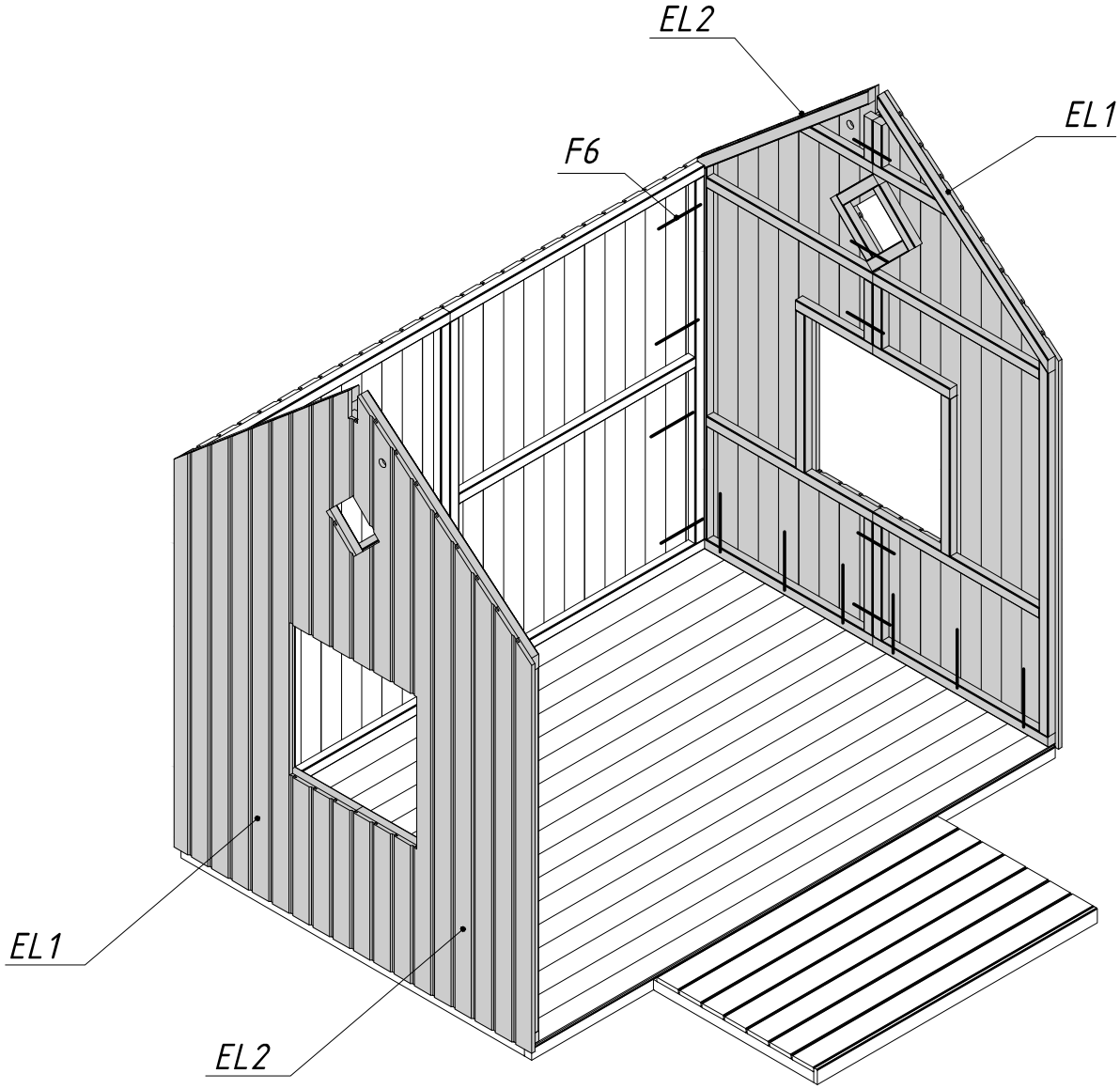

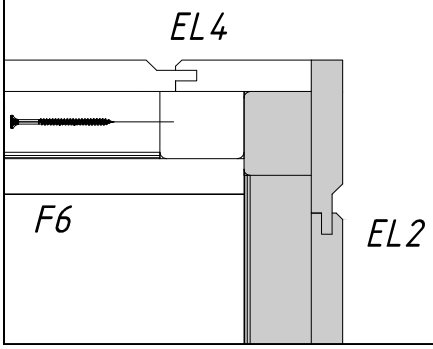

EL5 - 1 pcs
EL6 - 1 pcs
EL7 - 1 pcs
F6 - 24 pcs

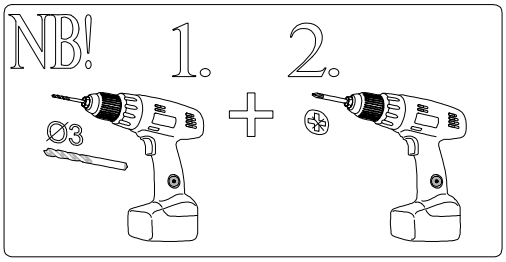

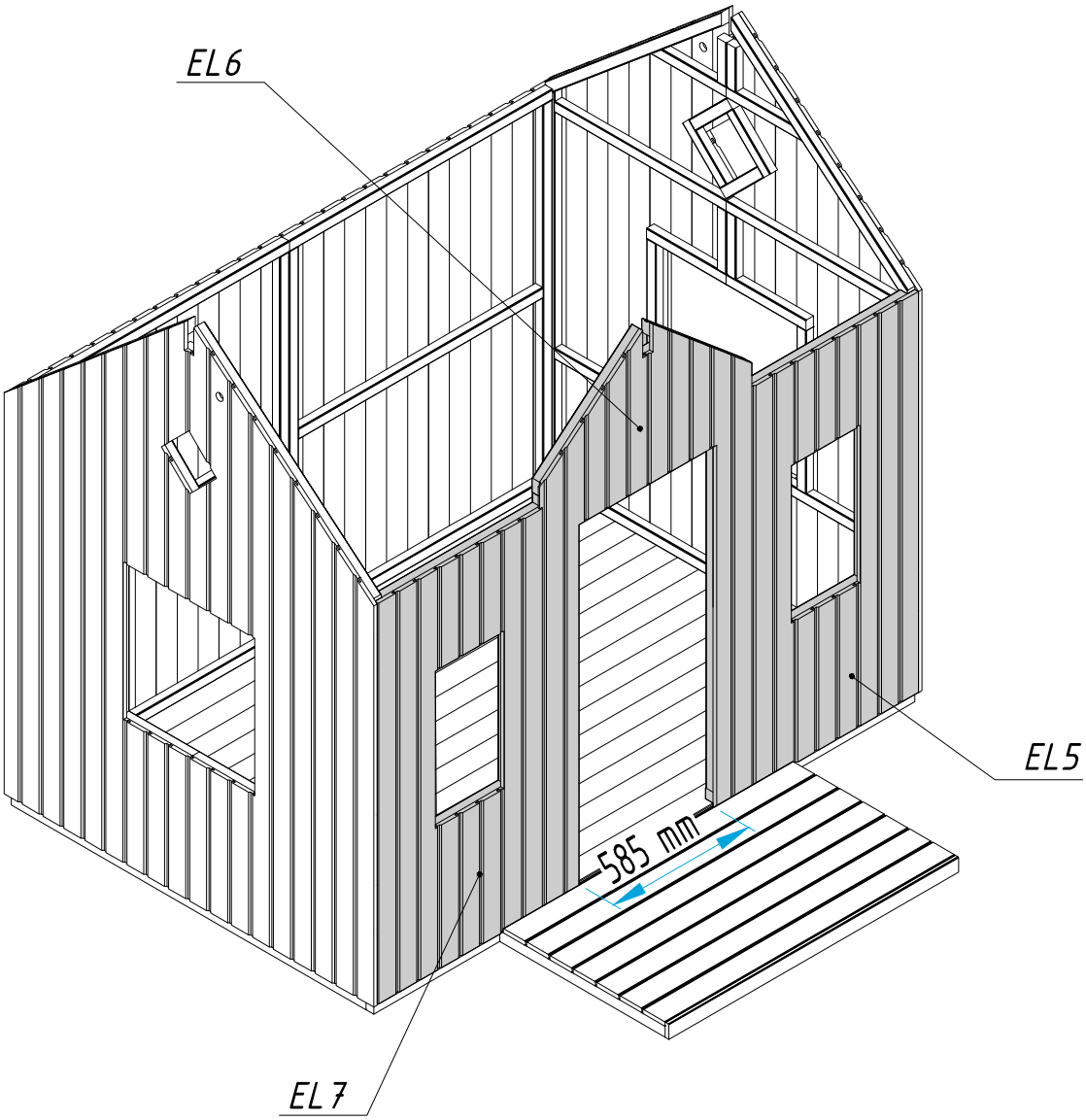

det 33 - 4 pcs
det 34 - 2 pcs
det 35 - 2 pcs
det 44 - 8 pcs
det 36 - 2 pcs
det 37 - 2 pcs

det 41 - 8 pcs
det 42 - 4 pcs
det 43 - 4 pcs
det 44 - 8 pcs
det 45 - 4 pcs
det 46 - 4 pcs
det 50 - 2 pcs
det 51 - 2 pcs
F10 - 124 pcs

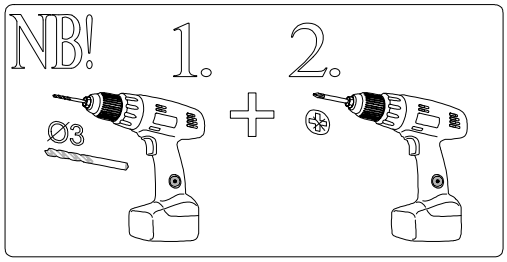

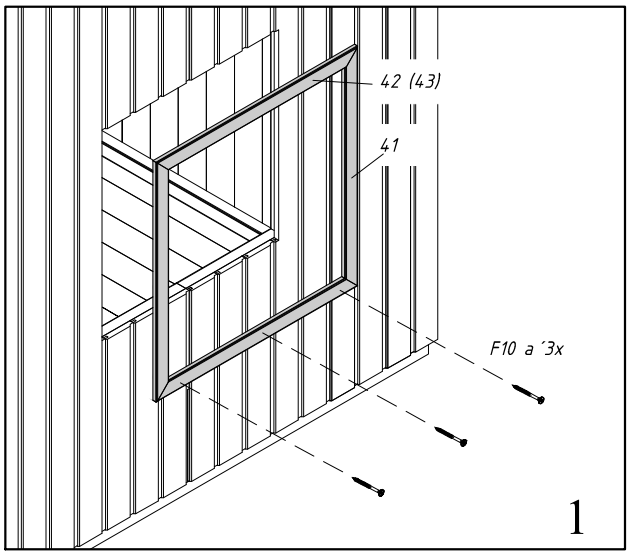

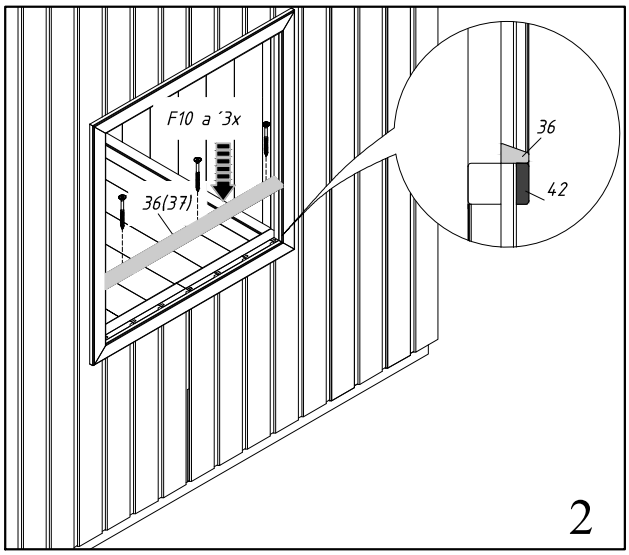

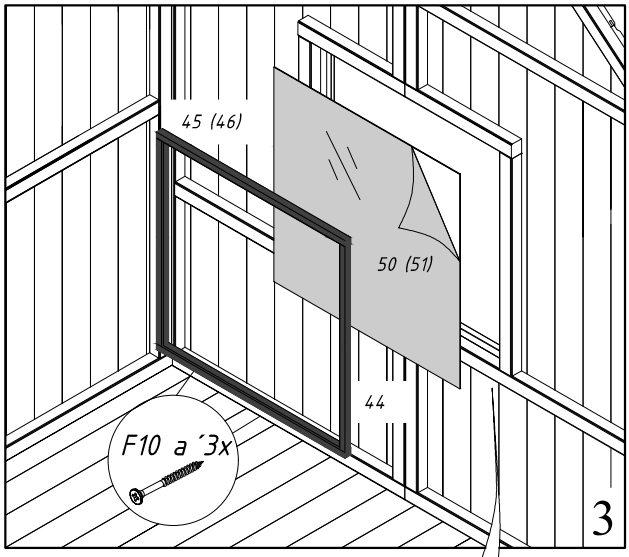

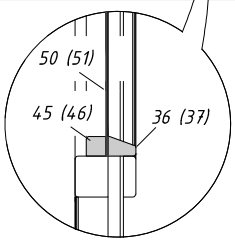

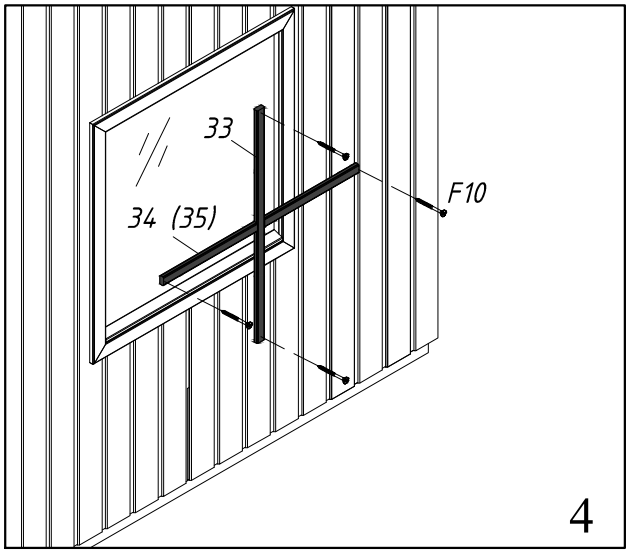

EL13 - 8 pcs
det 38 - 2 pcs
det 39 - 2 pcs
det 40 - 8 pcs
det 47 - 8 pcs
det 48 - 6 pcs
det 49 - 4 pcs
det 52 - 2 pcs

F6 - 8 pcs
F7 - 24 pcs
F9 - 16 pcs
F10 - 40 pcs

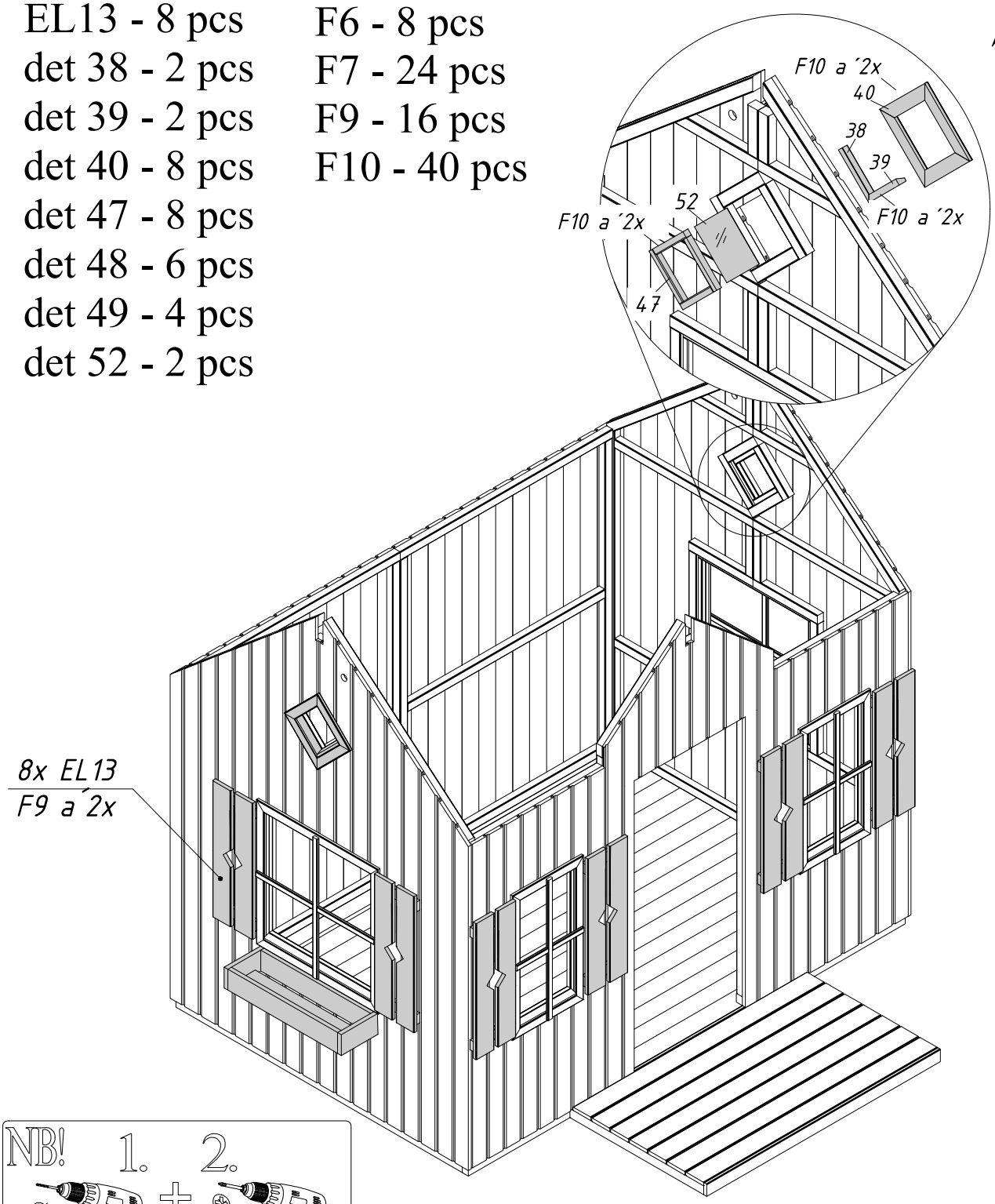

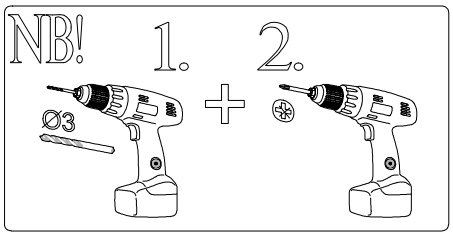

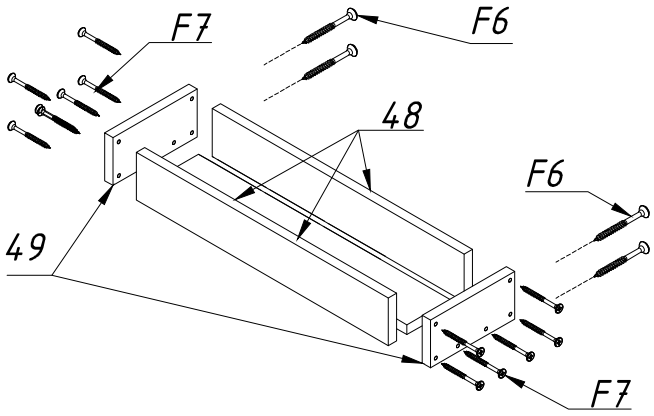

EL10 - 1 pcs
det 38 - 1 pcs
det 39 - 1pcs
det 40 - 4pcs
det 47 - 4pcs
det 52 - 1 pcs
F1 - 2 pcs
F3 - 1pcs
F9 - 14 pcs
F10 - 20 pcs

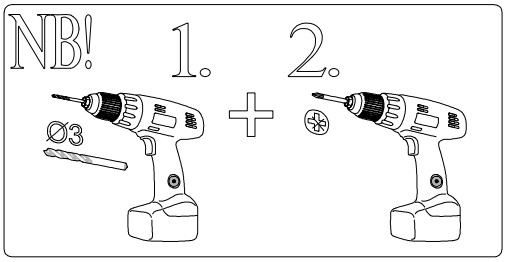

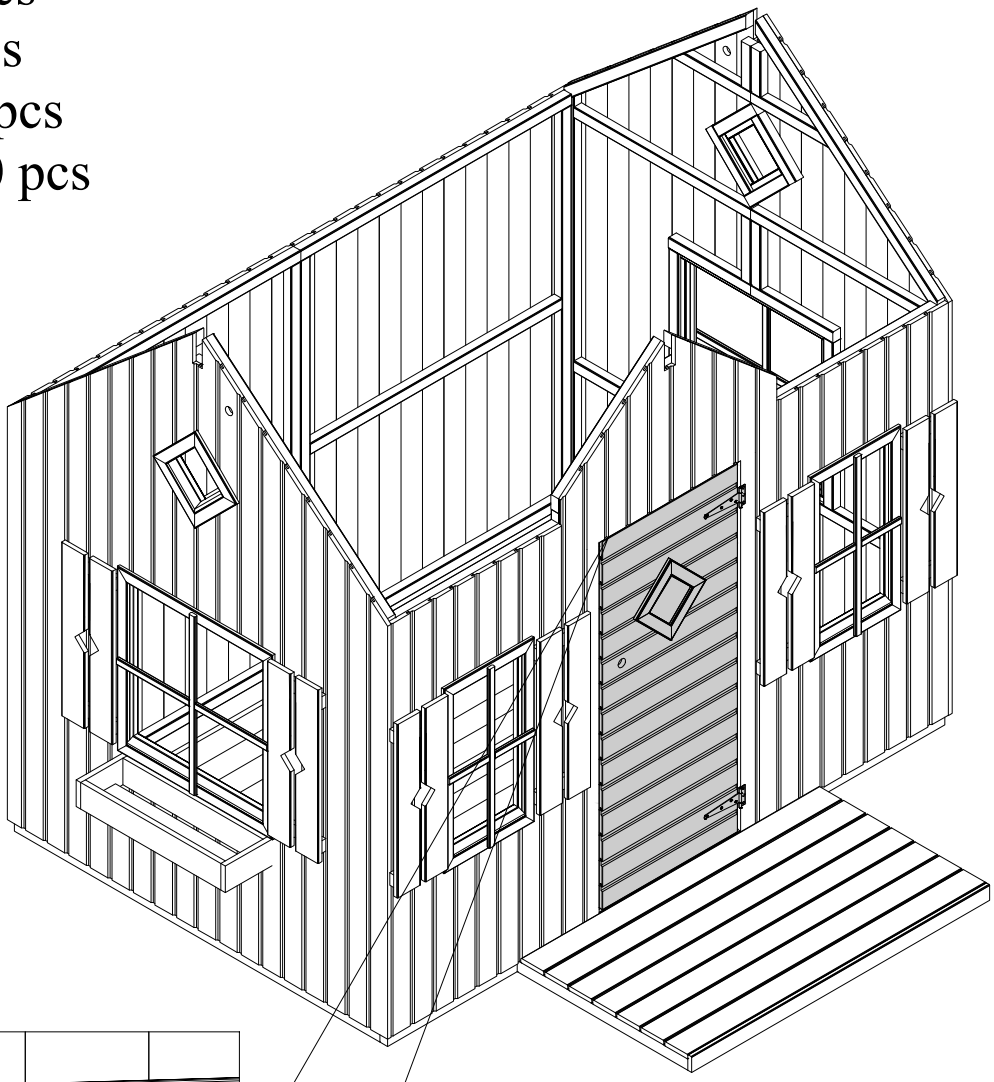

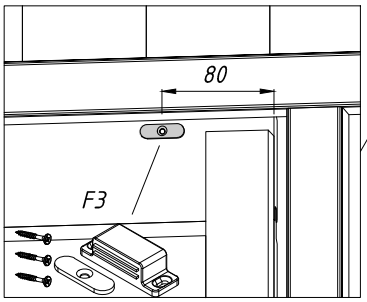

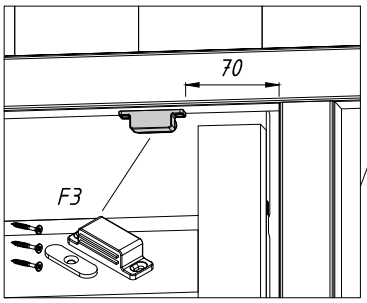

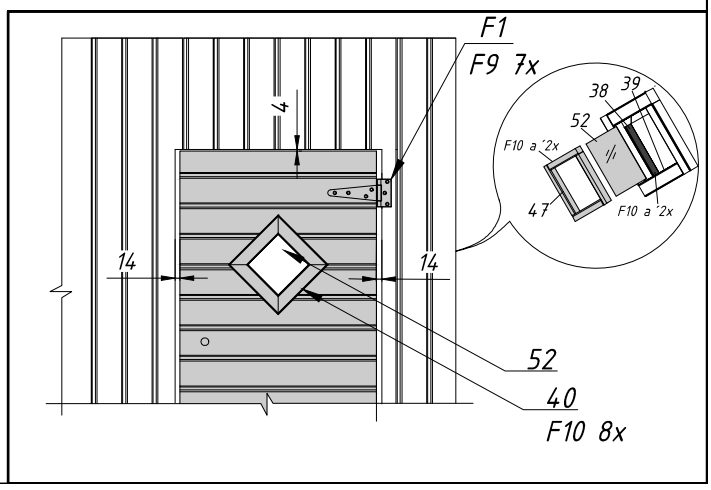

det.7 - 2 pcs
det.8 - 2 pcs
det.9 - 2 pcs
det.10 - 2 pcs
det.11 - 1 pcs

F7 - 23 pcs
F10 - 20 pcs

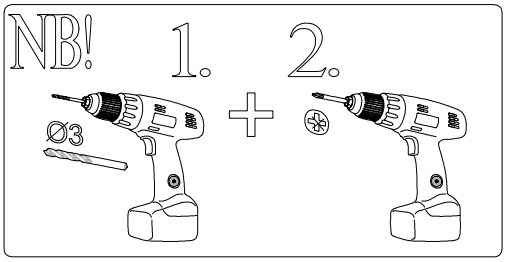

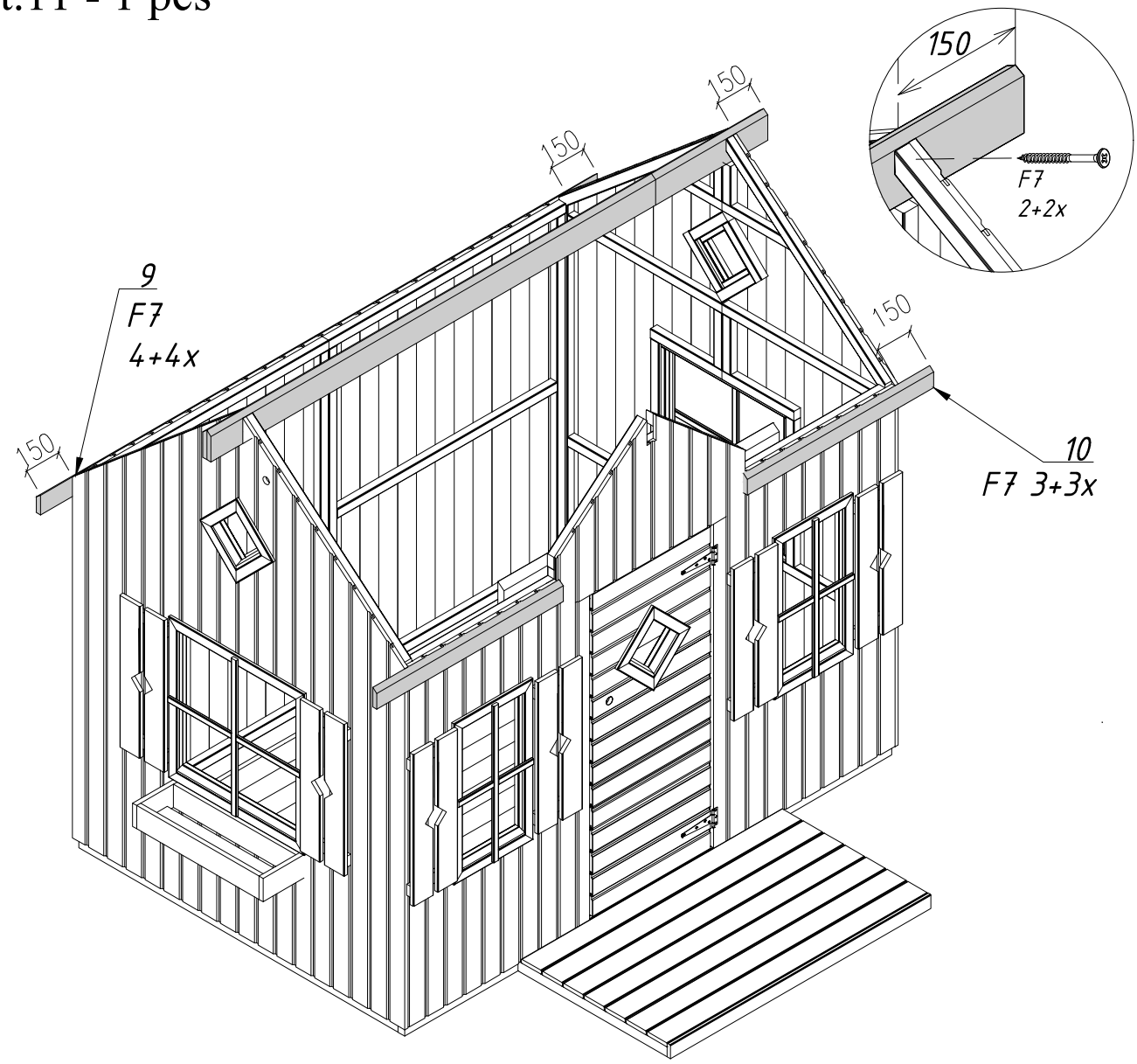

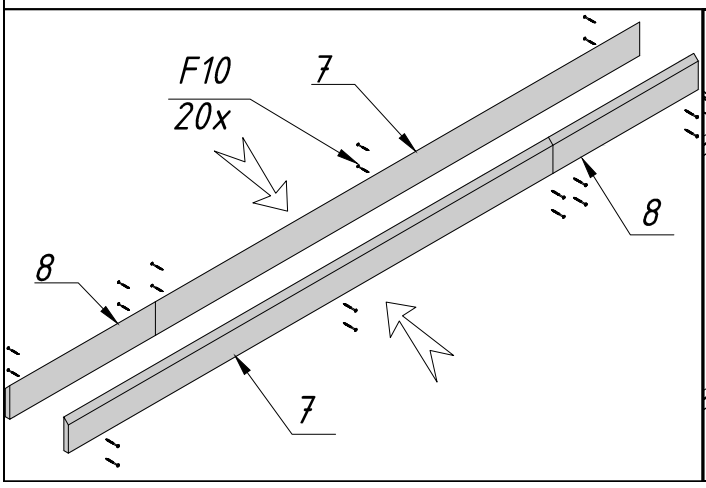

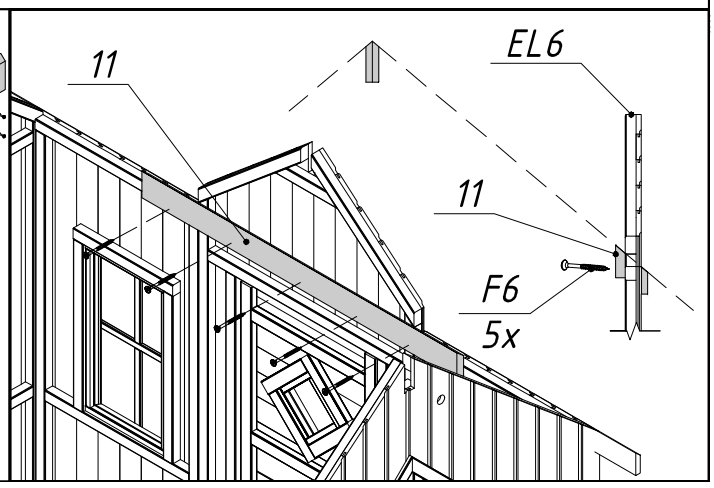

det.12 - 60 pcs
F12 - 120 pcs

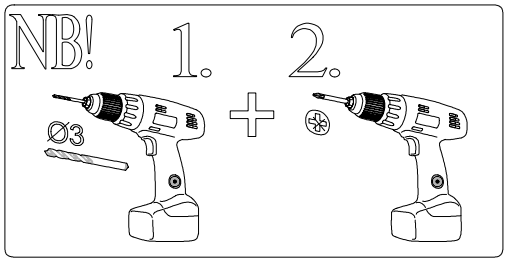

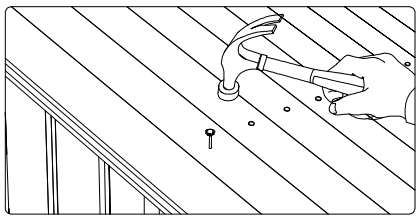

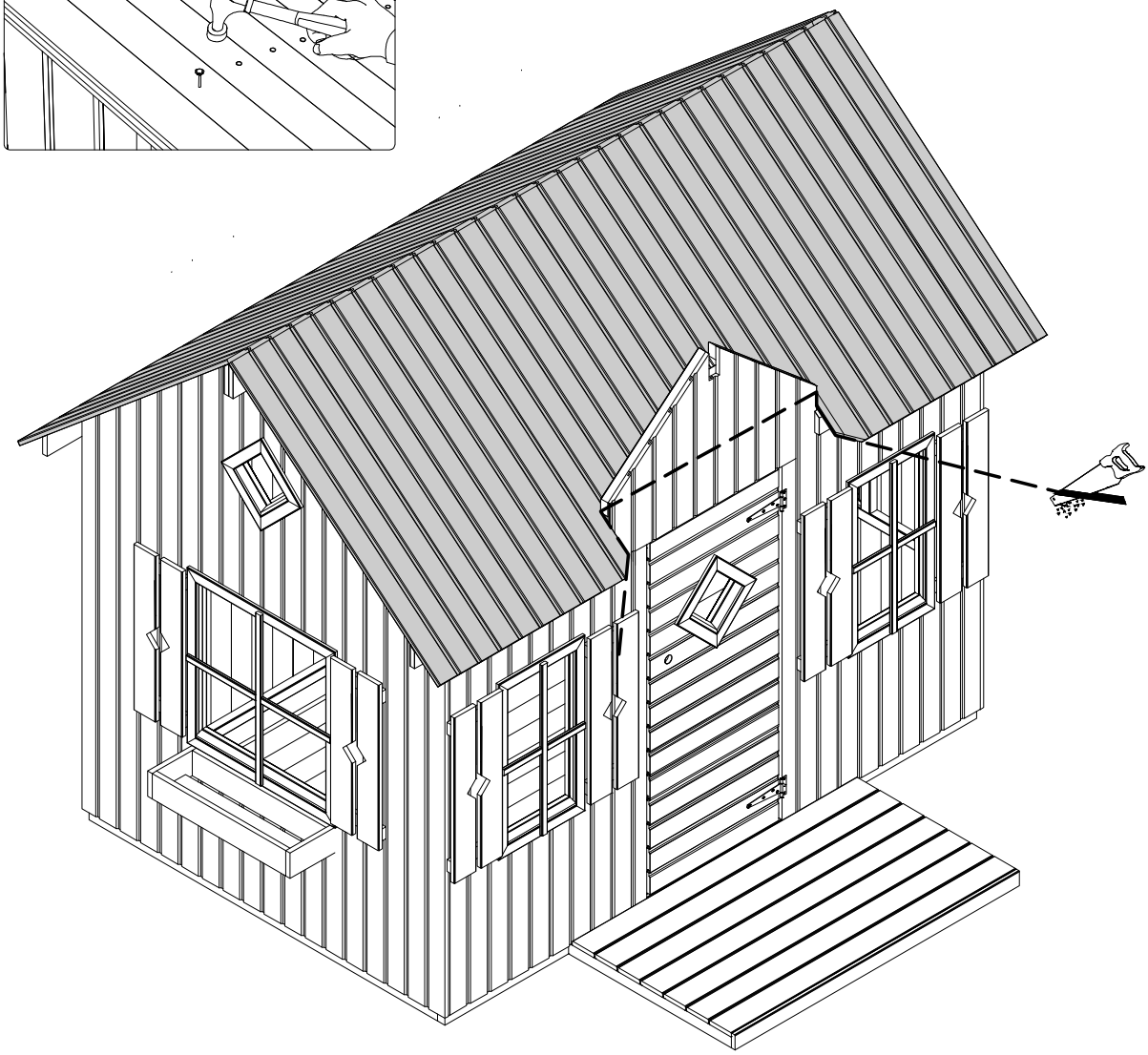

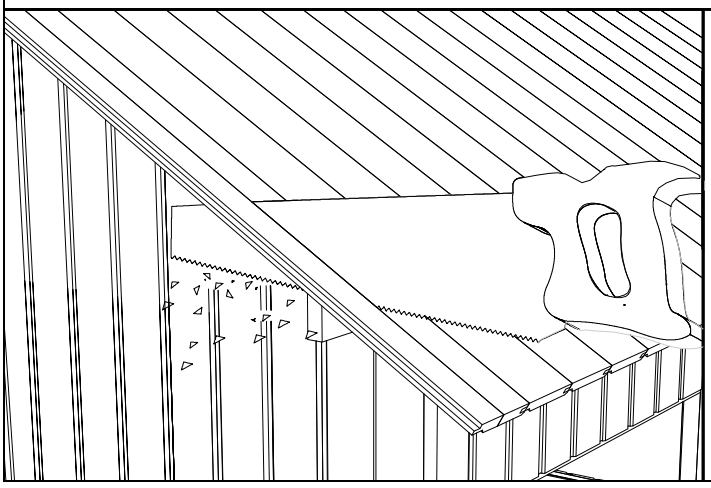

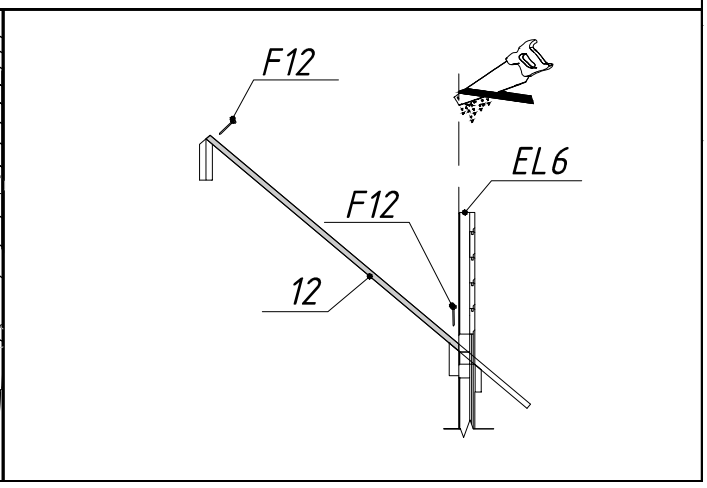

det.26 - 2 pcs
det.27 - 1 pcs
det. 28 - 2 pcs
det.29 - 1 pcs
F7 - 20 pcs

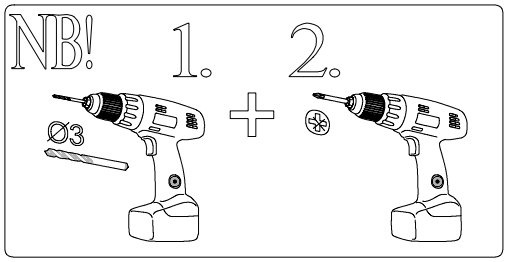

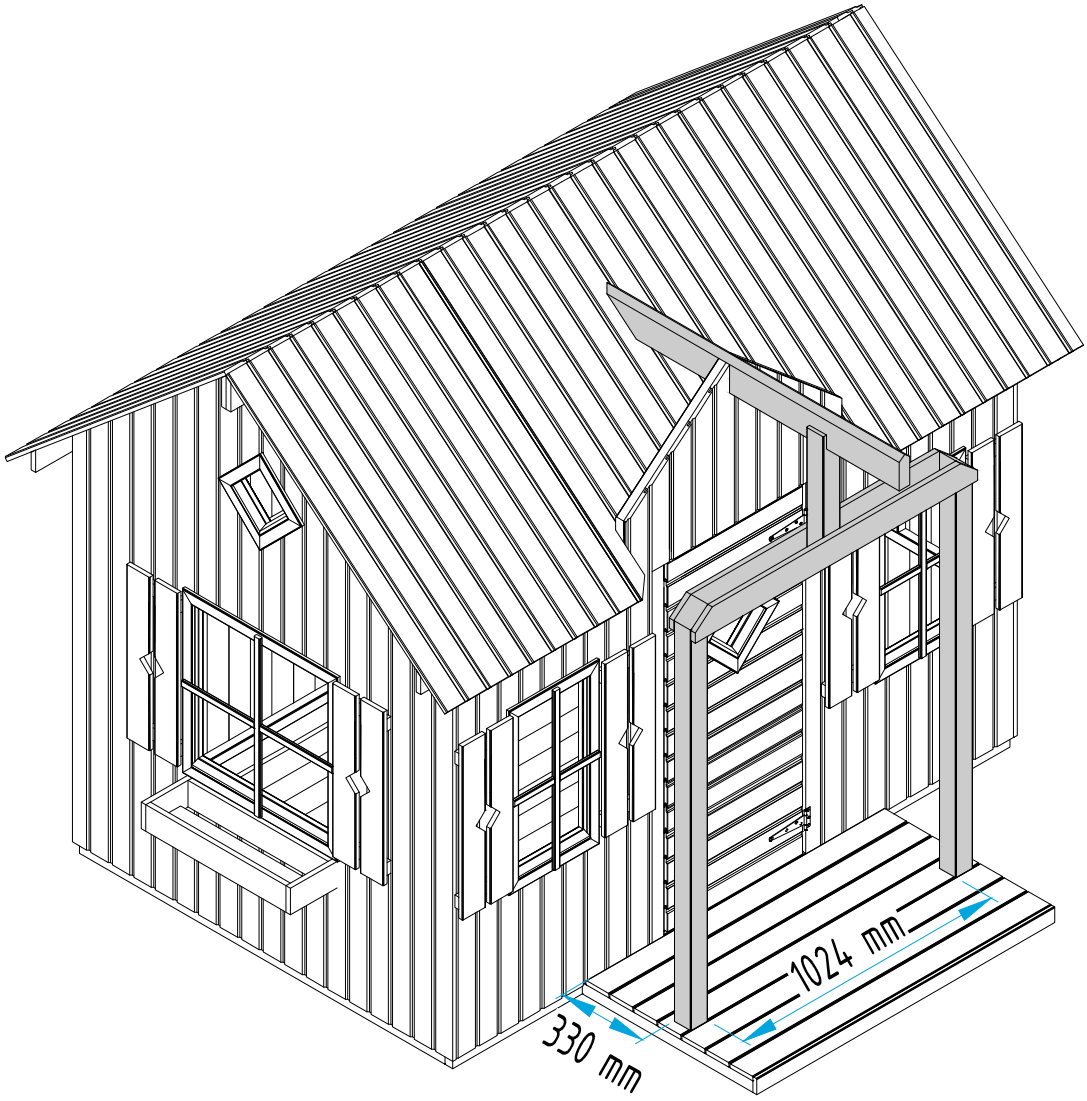

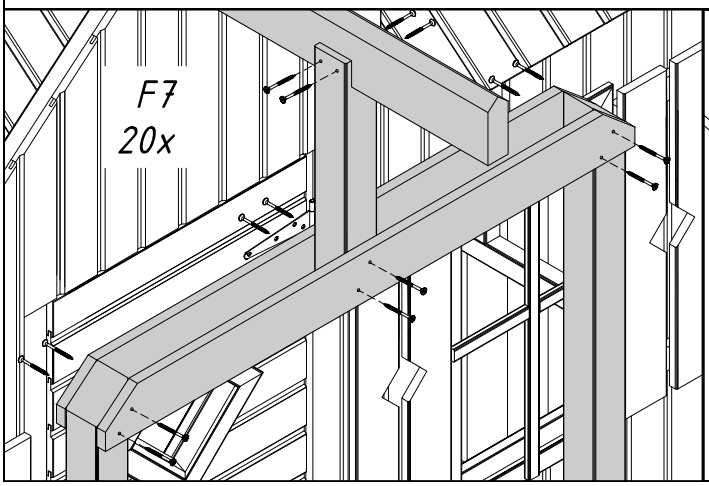

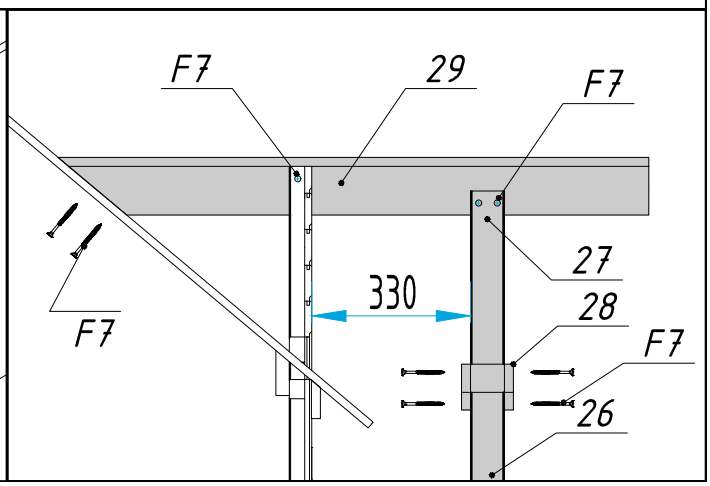

EL8 - 1 pcs
EL9 - 1 pcs
EL11 - 2 pcs
EL12 - 2 pcs
det.30 - 2 pcs
det.31 - 2 pcs
det.32 - pcs

F2 - 56 pcs
F5 - 14 pcs
F6 - 14 pcs
F7 - 20 pcs
F8 - 10 pcs

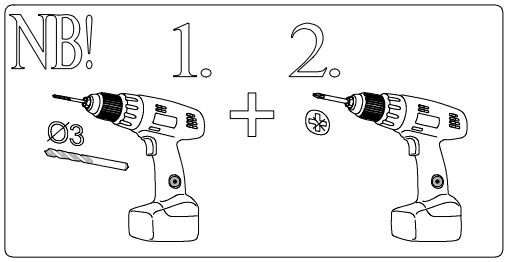

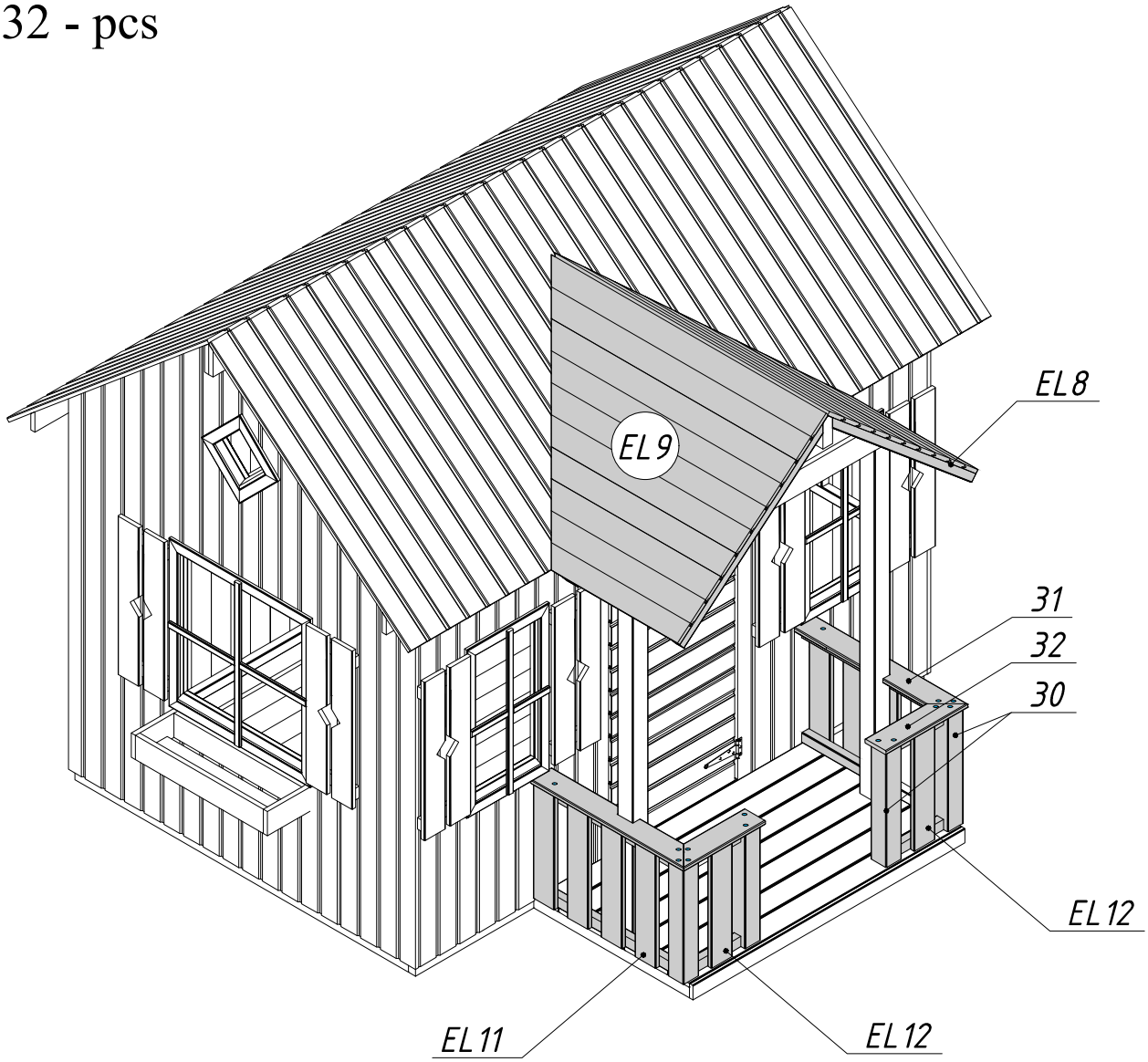

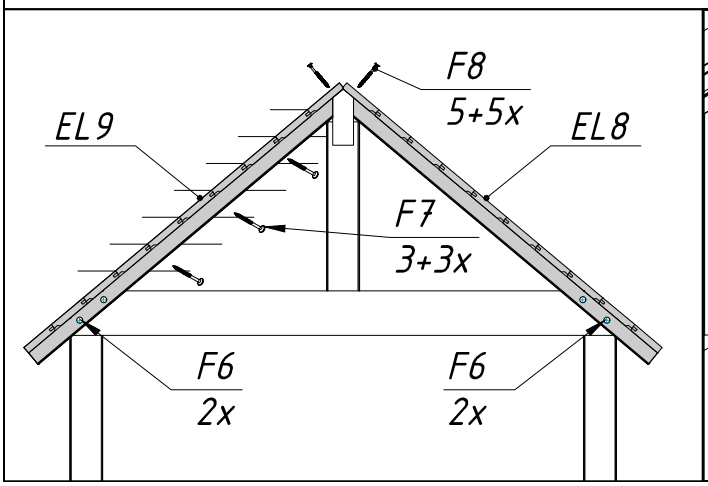

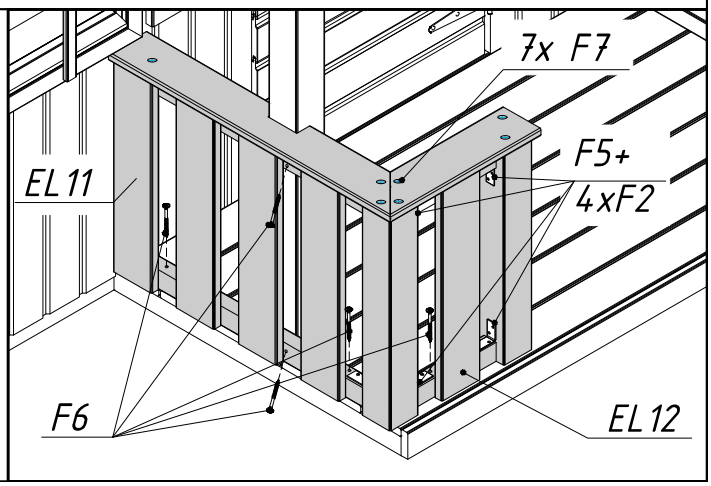
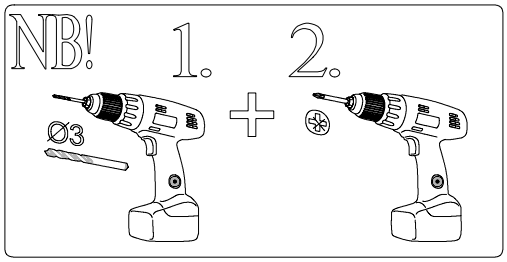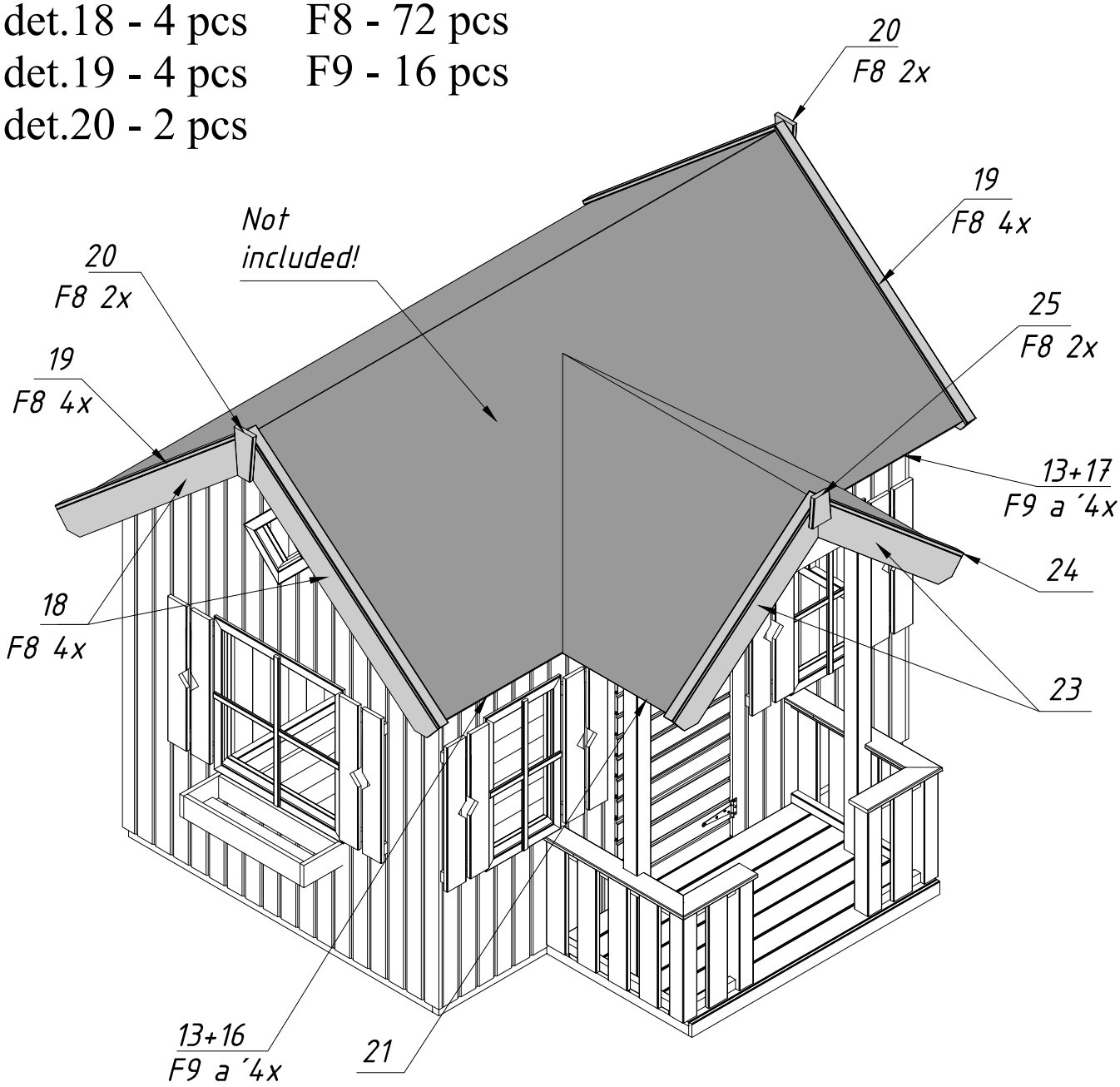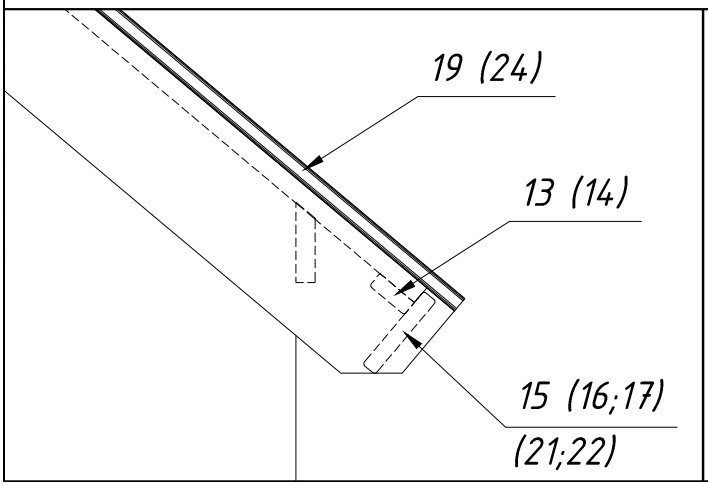
det.13 - 2 pcs
det.14 - 2 pcs
det.15 - 2 pcs
det.16 - 1 pcs
det.17 - 1 pcs
det.18 - 4 pcs
det.19 - 4 pcs
det.20 - 2 pcs
det.21 - 1 pcs
det.22 - 1 pcs
det.23 - 2 pcs
det.24 - 2 pcs
det.25 - 1 pcs
F8 - 72 pcs
F9 - 16 pcs